SINGLE-LOAD FRONT-LOAD DRYERS – 60 Hz

MDE28PDCYW / MDG28PDC / MDE28PDCZW

TURBOVENT® SYSTEM

- A high-speed blower wheel optimizes performance in long vents
- High airflow helps reduce drying times for a wide variety of loads
- Helps to increase efficiency and turns over the life of the machine

MICROPROCESSOR CONTROLS

- Easy-to-read diagnostics assist with quick identification of an issue helping to get the machine back into service
- Owners can control time-of-day pricing and additional costs for end-user upgrades
- End users have option to select ideal cycle for individual drying needs
- Easy-to-read Time Remaining Digital Display informs users of cycle times to help reduce bottlenecks

LARGE CAPACITY

- 6.7 cu. ft. capacity dryer helps allow for large loads to be dried efficiently and effectively
- Delivers an optimal drying experience for users and helps maximize productivity

BUILT TO LAST

- Commercial-grade finish on the dryer top provides a tough layer of protection for long-lasting performance and durability
- Front-panel accessibility provides fast entry to internal components for streamlined self-service
- Extra-large reversible door provides users unhindered access while loading and unloading



COIN READY
MDE/G28PDCGW

SINGLE-LOAD FRONT-LOAD DRYER MODELS — 60 Hz	
FUEL TYPE	**MODEL NUMBER**
Electric	MDE28PDCYW MDE28PDCZW
Gas	MDG28PD

7 5 YEAR LIMITED WARRANTY
MAYTAG® COMMERCIAL LAUNDRY

AMERICA
AN AMERICAN COMPANY FOR OVER 100 YEARS

See maytagcommerciallaundry.com for warranty details.

VISIT MAYTAGCOMMERCIALLAUNDRY.COM FOR MORE INFORMATION.

®/™ © 2026 Maytag. All rights reserved.
MY260570 08/26

SINGLE-LOAD FRONT-LOAD DRYERS – 60 Hz

MDE28PDCYW / MDG28PDC / MDE28PDCZW

SIDE VIEW

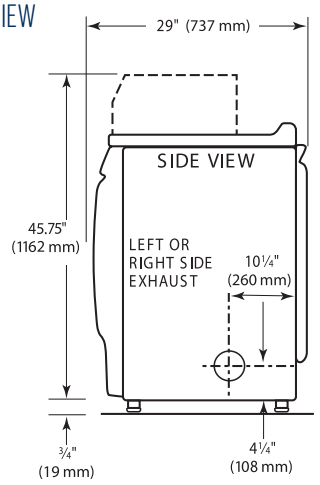

BACK VIEW

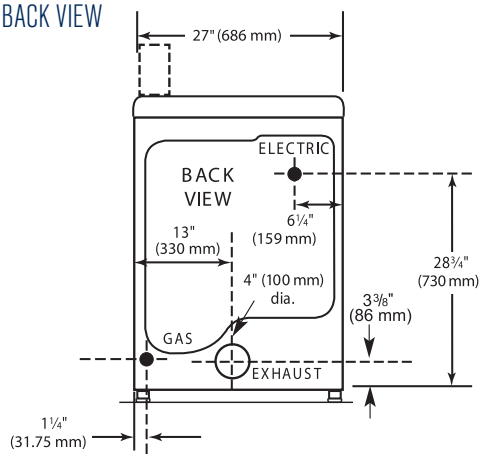

MAXIMUM EXHAUST DUCT LENGTH PER NUMBER OF TURNS

Number Of 90° Turns	Rigid Metal Vent: Box Hood and Louvered Style	Rigid Metal Vent: Angled Hood Style
0	130 ft (39.6 m)	129 ft. (39.3 m)
1	125 ft (38.1 m)	119 ft. (36.3 m)
2	115 ft. (35.1 m)	109 ft. (33.2 m)
3	106 ft (32.3 m)	100 ft. (30.5 m)
4	98 ft (29.9 m)	92 ft. (28.0 m)

MODELS	MDE28PDCYW	MDG28PDC	MDE28PDCZW
Fuel Type	Electric	Gas	Electric (Canada)
CAPACITY			
Cylinder Volume — cu. ft. (liters)	6.7 (190)	6.7 (190)	6.7 (190)
Cylinder Diameter — in. (mm)	26.26 (667)	26.26 (667)	26.26 (667)
Cylinder Depth — in. (mm)	20.39 (518)	20.39 (518)	20.39 (518)
DIMENSIONS			
Width — in. (mm)	27 (686)	27 (686)	27 (686)
Depth — in. (mm)	29 (737)	29 (737)	29 (737)
Height — in. (mm)	45.75 (1,162)*	45.75 (1,162)*	45.75 (1,162)*
Door Opening — in. (mm)	18.25 (464)	18.25 (464)	18.25 (464)
Exhaust Duct Diameter — in. (mm)	4 (100)**	4 (100)**	4 (100)**
CRATED DIMENSIONS			
Crated Width — in. (mm)	29.06 (738.12)	29.06 (738.12)	29.06 (738.12)
Crated Depth — in. (mm)	30.5 (775)	30.5 (775)	30.5 (775)
Crated Height — in. (mm)	45.63 (1159)	45.63 (1159)	45.63 (1159)
APPROXIMATE WEIGHT			
Uncrated — lb (kg)	147 (67)	150 (68)	147 (67)
Crated — lb (kg)	160 (73)	163 (74)	160 (73)
ELECTRICAL REQUIREMENTS			
Voltage	240V - 60Hz	120V - 60Hz	240V - 60Hz
Breaker/Fuse — amps	30	15	30
Airflow — CFM (CMM)	215 (6.1)	230 (6.5)	215 (6.1)
Electric Heating Element (watts)	5,600	N/A	5,250
Gas Rating — BTU/hr (kcal/hr)	N/A	24,000 (6,048)	N/A
Gas Inlet Size — in.	N/A	3/8 N.P.T.	N/A
Motor Size — HP (kW)	1/3 (.25)	1/3 (.25)	1/3 (.25)

*Includes height of metercase.
**Use 4" (100 mm) diameter rigid aluminum or galvanized steel duct. Never use plastic, non-metal or combustible duct.
See specific instructions for proper installation. Because of continuous product improvement, Maytag reserves the right to change specifications without notice. Export model ships without coin-drop mechanism.

®/™ © 2026 Maytag. All rights reserved.
MY260570 08/26