SINGLE-LOAD TOP-LOAD MATCHING DRYERS – 60 Hz

MDE20 AND MDG20

EASILY REMOVABLE FRONT ACCESS PANEL

- Provides fast entry to internal components for streamlined self-service

CONTROLS TO MEET YOUR NEEDS

- Mechanical controls provide a simple user interface with robust, easy-to-use knobs. (MDE/G20CS and MDE/G20MN)
- Get flexibility and individual cycle pricing options for optimal earnings through Intelligent Controls with M-Series Technology, while end users can easily choose their preferred wash experience with one-touch cycle selection. (MDE/G20PD and MDE/G20PR)

LARGE CAPACITY

- 7.4 cu. ft. capacity dryer helps allow for large loads to be dried efficiently and effectively
- Delivers an optimal drying experience for users and helps maximize productivity

BUILT TO LAST

- Commercial-grade finish on the dryer top provides a tough layer of protection for long-lasting performance and durability
- Full wrap console is designed to help protect the internal components
- Extra-large reversible door provides users unhindered access while loading and unloading



COIN DROP EQUIPPED
MDE20PDAYW pictured
(Also available in Gas)



CANADA COIN DROP EQUIPPED
MDE20PDAZW pictured
(Also available in Gas)



CARD READER READY
MDE20PRAYW pictured
(Also available in Gas)



COIN SLIDE READY
MDE20CSAYW pictured
(Also available in Gas)



NON-VEND
MDE20MNAYW pictured
(Also available in Gas)

SINGLE-LOAD TOP-LOAD MATCHING DRYER MODELS - 60Hz

PAYMENT CONFIGURATION	ELECTRIC	GAS	CANADA ELECTRIC
Coin Drop Equipped	MDE20PDAYW	MDG20PDAWW	MDE20PDAZW
Card Reader Ready/ Non-Vend	MDE20PRAYW	MDG20PRAWW	MDE20PRAZW
Coin Slide Ready	MDE20CSAYW	MDG20CSAWW	MDE20CSAZW
Non-Vend	MDE20MNAYW	MDG20MNAWW	MDE20MNAZW

5 YEAR LIMITED ALL PARTS WARRANTY
MAYTAG® COMMERCIAL LAUNDRY

AMERICA
AN AMERICAN COMPANY FOR OVER 100 YEARS

*On select models
See maytagcommerciallaundry.com for warranty details.

VISIT MAYTAGCOMMERCIALLAUNDRY.COM FOR MORE INFORMATION.

®/™ © 2026 Maytag. All rights reserved.
MY260568 08/26

SINGLE-LOAD TOP-LOAD MATCHING DRYERS – 60 Hz

MDE20 AND MDG20

SIDE VIEW

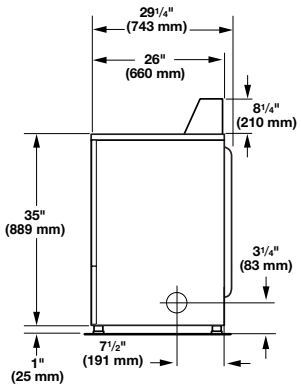

BACK VIEW

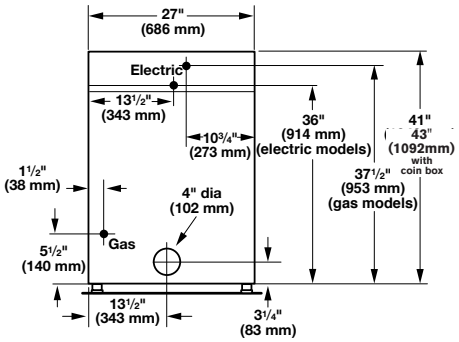

MAXIMUM EXHAUST DUCT LENGTH PER NUMBER OF TURNS

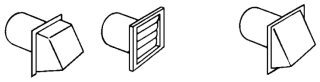

Rigid Metal Vent

Number Of 90° Turns	Box Hood and Louvered Style	Angled Hood Style
0	64 ft. (19.5 m)	58 ft. (17.7 m)
1	54 ft. (16.5 m)	48 ft. (14.6 m)
2	44 ft. (13.4 m)	38 ft. (11.6 m)
3	35 ft. (10.7 m)	29 ft. (8.8 m)
4	27 ft. (8.2 m)	21 ft. (6.4 m)

*Includes height of metercase for coin drop and coin slide models
**Use 4" (101.6 mm) diameter rigid aluminum or galvanized steel duct. Never use plastic, non-metal, or combustible duct.

Dimensions are for planning purposes only. See specific instructions for proper installation. Because of continuous product improvement, Maytag reserves the right to change specifications without notice.

MODELS COIN DROP/COIN SLIDE/CARD READER READY NON-VEND	**MDE20** (PD/CS/PR) **MDE20** (MN)	**MDG20** (PD/CS/PR) **MDG20** (MN)	**MDE20** (PD/CS/PR) **MDE20** (MN)
FUEL TYPE	**ELECTRIC**	**GAS**	**ELECTRIC** (CANADA)
CAPACITY			
Cylinder Volume — cu. ft. (liters)	7.4 (210)	7.4 (210)	7.4 (210)
Cylinder Diameter — in. (mm)	26.26 (667)	26.26 (667)	26.26 (667)
Cylinder Depth — in. (mm)	23.2 (590)	23.2 (590)	23.2 (590)
DIMENSIONS			
Width — in. (mm)	27 (686)	27 (686)	27 (686)
Depth — in. (mm)	29.25 (743)	29.25 (743)	29.25 (743)
Height — in. (mm)	43 (1,092)*	43 (1,092)*	41 (1,042)*
Door Opening — in. (mm)	20.25 (514)	20.25 (514)	20.25 (514)
Exhaust Duct Diameter — in. (mm)	4 (101.6)**	4 (101.6)**	4 (101.6)**
CRATED DIMENSIONS			
Crated Width — in. (mm)	28.8 (731)	28.8 (731)	28.8 (731)
Crated Depth — in. (mm)	30.8 (782)	30.8 (782)	30.8 (782)
Crated Height — in. (mm)	44.65 (1,134)	44.65 (1,134)	44.65 (1,134)
APPROXIMATE WEIGHT			
Uncrated — lb (kg) Coin Drop & Coin Slide Models	125 (56.7)	130 (59)	125 (56.7)
Uncrated — lb (kg) Card Ready & Non-Vend Models	115 (52.2)	120 (54.4)	115 (52.2)
Crated — lb (kg) Coin Drop & Coin Slide Models	135 (61.2)	140 (63.5)	135 (61.2)
Crated — lb (kg) Card Ready & Non-Vend Models	125 (56.7)	130 (59)	125 (56.7)
ELECTRICAL REQUIREMENTS			
Voltage	240V	120V	240V
Breaker/Fuse — amps	30	15	30
Airflow — CFM (CMM)	178 (6.10)	183 (6.50)	178 (6.10)
Electric Heating Element (watts)	5,600	N/A	5,250
Gas Rating — BTU/hr (kcal/hr)	N/A	22,000 (5,544)	N/A
Gas Inlet Size — in.	N/A	⅜ N.P.T.	N/A
Motor Size — HP (kW)	⅓ (.25)	⅓ (.25)	⅓ (.25)

®/™ © 2026 Maytag. All rights reserved.
MY260568 08/26