MDE/MDG28PR
SUPER-CAPACITY DRYER

MAYTAG COMMERCIAL®



MICROPROCESSOR CONTROLS



- Provides simple programming options for owner: including adjustable cycle price, cycle time, diagnostics and vend count.
- Easy one-touch cycle selection for customers.

TURBOVENT™ DRYER TECHNOLOGY



- Additional blower wheel provides exceptional performance in long vents.
- High airflow reduces dry time.

BUILT TO LAST



- Commercial-grade finish on the dryer top provides a tough layer of protection for long-lasting performance and durability.

CLOTHESPIN™ APP BY MAYTAG COMPATIBLE



- Customers will love how convenient it is to do their laundry with the new Clothespin™ app by Maytag.
- They can use their smartphones to pay for their laundry, remotely check for available washers and dryers, and receive a notification when their laundry cycles are complete.*

5-YEAR LIMITED WARRANTY



- All parts are covered for 5 years.**

*Subject to terms of use and privacy policy. Message and data rates may apply. In Canada, Maytag Connect 360°™ compatible only.
**See maytagcommerciallaundry.com for complete warranty for details.


SIMPLE PROGRAMMING


FRONT ACCESS PANEL



ONE-TOUCH CYCLE SELECTION


MATCHING WASHER AVAILABLE



Visit **maytagcommerciallaundry.com** or call **800-662-3587**

MY260572

MDE/MDG28PR
SUPER-CAPACITY DRYER

MAYTAG COMMERCIAL®

OUR COMMITMENT TO DEPENDABLE QUALITY

For well over 50 years, Maytag® Commercial Laundry has promised and delivered dependability. We create that quality by making durable washers and dryers, built to endure heavy use and last for years. We design our machines to perform reliably and to produce consistent results. Finally, we give our washers and dryers the power to do their jobs thoroughly, cleaning and drying laundry quickly and efficiently—and justifying the trust that has been placed in us for generations.

MAYTAG® SUPER-CAPACITY DRYER

MICROPROCESSOR CONTROLS, CARD READY

DRYER SPECIFICATIONS	
MODEL	**MDE/MDG28PR**
MOTOR	
Single-phase, thermoprotected against overload, auto-reset	Yes
HP (kw)	⅓ (.25)
Tumble speed—RPM	50 ± 1
CAPACITY	
Cu. ft. (liters)	6.7 (190)
AIRFLOW	
Gas models—cfm (cmm)	230 (6.5)
Electric models—cfm (cmm)	215 (6.1)
SOUND LEVEL (export model only)	
Sound pressure level, Lpa (dbA) (Kpa: ± 10dbA)	58
ELECTRICAL REQUIREMENTS	
MDE model—voltage	240V/60Hz
MDG model—voltage	120V/60Hz
BREAKER/FUSE MIN. REQUIREMENTS	
MDE model—amps	30
MDG model—amps	15
ELECTRIC HEATING ELEMENT	
Domestic models—watts	5,600
Canadian models—watts	5,250
GAS RATING	
MDG model—BTU/hr. (kcal/hr.)	24,000 (6,048)
EXHAUST DUCT DIAMETER—IN. (MM)	4 (100)*
ELECTRONIC BURNER IGNITION	
MDG model	Yes
GAS INLET	
MDG model—in.	3/8 N.P.T.
ADJUSTABLE LEVELING LEGS	Yes
APPROXIMATE WEIGHT	
Crated—lbs. (kg) electric/gas	160 (73)/113 (74)
Uncrated—lbs. (kg) electric/gas	147 (67)/150 (68)
DIMENSIONS	
Width—in. (mm)	27 (686)
Depth—in. (mm)	29 (737)
Height—in. (mm)	39.25 (997)
Door opening diameter—in. (mm)	18.25 (464)
ADA-COMPLIANT WITHOUT OPTIONAL PEDESTAL	Yes
Optional pedestal adds: height—in. (mm)	2.75 (70)

*Use 4" (100 mm) diameter rigid aluminum or galvanized steel duct. Never use plastic, non-metal or combustible duct.
See specific instructions for proper installation. Because of continuous product improvement, Maytag reserves the right to change specifications without notice.

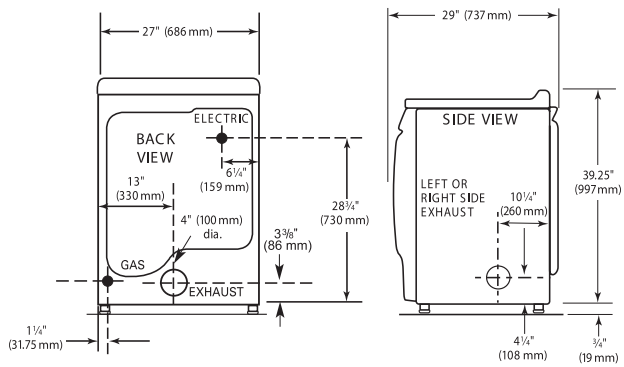

MAXIMUM EXHAUST DUCT LENGTH PER NUMBER OF TURNS

Number Of 90° Turns		
Rigid Metal Vent		
	Box Hood and Louvered Style	**Angled Hood Style**
0	135 ft. (41.2 m)	129 ft. (39.3 m)
1	125 ft. (38.1 m)	119 ft. (36.3 m)
2	115 ft. (35.1 m)	109 ft. (33.2 m)
3	106 ft. (32.3 m)	100 ft. (30.5 m)
4	98 ft. (29.9 m)	92 ft. (28.0 m)
Flexible Metal Vent		
	Box Hood and Louvered Style	**Angled Hood Style**
0	76 ft. (23.2 m)	62 ft. (18.9 m)
1	71 ft. (21.6 m)	57 ft. (17.4 m)
2	67 ft. (20.4 m)	53 ft. (16.2 m)
3	65 ft. (19.8 m)	51 ft. (15.6 m)
4	63 ft. (19.2 m)	49 ft. (14.9 m)

5 YEAR LIMITED ALL PARTS WARRANTY
MAYTAG® COMMERCIAL LAUNDRY

5-YEAR LIMITED WARRANTY
ALL PARTS COVERED

For a period from the date of original purchase through the time listed above, the designated parts that fail in normal commercial use will be repaired or replaced free of charge for the part itself, with the owner paying all other costs, including labor, transportation and customs duty. Chemical damage is excluded from all warranty coverage. See complete warranty for details.

®/™ ©2026 Maytag. All rights reserved. 10/26