COMBINATION STACK DRYER/DRYER – 50 Hz

MLE/MLG27PDFGW



COIN DROP EQUIPPED
MLE/MLG27PDFGW

LARGE CAPACITY

- Two 7.4 cu. ft. capacity dryers allow for large loads to be dried effectively
- Delivers an optimal drying experience for users and helps maximize productivity

CONTROLS TO MEET YOUR NEEDS

- An intuitive setup with easily programmable controls
- Allows owners to take control of their revenue streams with time-of-day pricing and additional costs for end-user upgrades
- Simple, one-touch cycle selection provides clear options for end users
- USB port enables the import and export of cycle settings, audit data, and software updates

FRONT-ACCESS PANEL

- Streamlines self-service by providing quick entry to the motor, transmission, and wash tub
- Minimizes downtime to help keep the machine running

BUILT TO LAST

- Commercial-grade finish on the dryer top provides a tough layer of protection for long-lasting performance and durability
- Front-panel accessibility provides fast entry to internal components for streamlined self-service
- Blower guard reduces service calls, helping to keep machines running at optimal turns

SINGLE-LOAD STACK DRYER/DRYER — 50 Hz		
FUEL TYPE	**MODEL NUMBER**	**PAYMENT CONFIGURATION**
Electric	MLE27PDFGW	Coin Drop Equipped
Gas	MLG27PDFGW	Coin Drop Equipped

5 YEAR LIMITED ALL PARTS WARRANTY
MAYTAG COMMERCIAL LAUNDRY

AMERICA
AN AMERICAN COMPANY FOR OVER 100 YEARS

See maytagcommerciallaundry.com for warranty details.

VISIT MAYTAGCOMMERCIALLAUNDRY.COM FOR MORE INFORMATION.

®/™ © 2026 Maytag. All rights reserved.
MY260563 08/26

COMBINATION STACK DRYER/DRYER – 50 Hz

MLE/MLG27PDFGW

SIDE VIEW

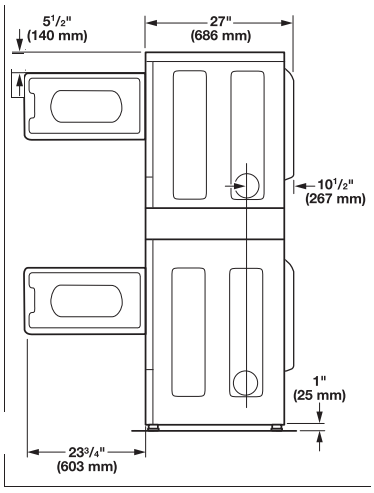

BACK VIEW

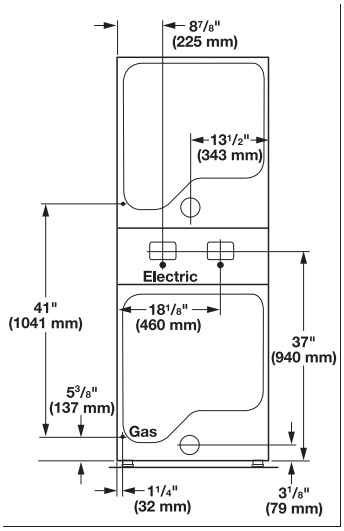

MAXIMUM EXHAUST DUCT LENGTH PER NUMBER OF TURNS

Number of 90° Turns	Rigid Metal Vent	
	Box Hood and Louvered Style	Angled Hood Style
0	39.6 m (130 ft.)	39.3 m (129 ft.)
1	38.1 m (125 ft.)	36.3 m (119 ft.)
2	35.1 m (115 ft.)	33.2 m (109 ft.)
3	32.3 m (106 ft.)	30.5 m (100 ft.)
4	29.9 m (98 ft.)	28.0 m (92 ft.)

MODELS	MLE27PDFGW	MLG27PDFGW
FUEL TYPE	Electric	Gas
CAPACITY		
Cylinder Volume — cu. ft. (liters)	7.4 (209.5)	7.4 (209.5)
Cylinder Diameter — in. (mm)	26.26 (667)	26.26 (667)
Cylinder Depth — in. (mm)	23.2 (590)	23.2 (590)
DIMENSIONS		
Width — in. (mm)	27 (686)	27 (686)
Depth — in. (mm)	29 (737)	29 (737)
Height — in. (mm)	76.75 (1,950)	76.75 (1,950)
Door Opening — in. (mm)	20.25 (514)	20.25 (514)
Exhaust Duct Diameter — in. (mm)	4 (101.6)*	4 (101.6)*
CRATED DIMENSIONS		
Crated Width — in. (mm)	28.7 (730)	28.7 (730)
Crated Depth — in. (mm)	33.4 (848)	33.4 (848)
Crated Height — in. (mm)	79.1 (2008)	79.1 (2008)
APPROXIMATE WEIGHT		
Uncrated — lb (kg)	272 (123.4)	272 (123.4)
Crated — lb (kg)	294 (133.4)	294 (133.4)
ELECTRICAL REQUIREMENTS		
Voltage	220-240V 50Hz	220-240V 50Hz
Breaker/Fuse — amps	30	15
Airflow — CFM (CMM)	215 (6.1)	230 (6.5)
Electric Heating Element (watts)	4,600	N/A
Gas Rating — BTU/hr (kcal/hr)	N/A	24,000 (6,048)
Gas Inlet Size — in.	N/A	3/8 N.P.T.
Motor Size — HP (kW)	1/3 (.25)	1/3 (.25)

*Use 4" (100 mm) diameter rigid aluminum or galvanized steel duct.
Never use plastic, non-metal or combustible duct.
See specific instructions for proper installation. Because of continuous product improvement, Maytag reserves the right to change specifications without notice.

VISIT MAYTAGCOMMERCIALLAUNDRY.COM FOR MORE INFORMATION.

®/™ © 2026 Maytag. All rights reserved.
MY260563 08/26