COMBINATION STACK DRYER/DRYER – 60 Hz

MLE/MLG26PDF MLE/MLG26PRL
MLE/MLG26PRF MLE/MLG27PDF MLG27PRF



COIN DROP EQUIPPED
MLE/MLG27PDF



CARD READER READY
MLE/MLG26PRF

LARGE CAPACITY

- Two 7.4 cu. ft. capacity dryers allow for large loads to be dried effectively
- Delivers an optimal drying experience for users and helps maximize productivity

CONTROLS TO MEET YOUR NEEDS

- An intuitive setup with easily programmable controls
- Allows owners to take control of their revenue streams with time-of-day pricing and additional costs for end-user upgrades
- Simple, one-touch cycle selection provides clear options for end users
- USB port enables the import and export of cycle settings, audit data, and software updates

FRONT-ACCESS PANEL

- Streamlines self-service by providing quick entry to the motor, transmission, and wash tub
- Minimizes downtime to help keep the machine running

BUILT TO LAST

- Commercial-grade finish on the dryer top provides a tough layer of protection for long-lasting performance and durability
- Front-panel accessibility provides fast entry to internal components for streamlined self-service
- Blower guard reduces service calls, helping to keep machines running at optimal turns

SINGLE-LOAD STACK DRYER/DRYER — 60 Hz			
PAYMENT CONFIGURATION	GAS	ELECTRIÇ	ELECTRIC (CANADA)
Coin Drop Equipped	MLG26PDFWW MLG27PDFWW	MLE26PDFYW MLE27PDFYW	MLE27PDFZW
Card Reader Ready	MLG26PRFWW MLG26PRLWW MLG27PRFWW	MLE26PRFYW MLE26PRLYW	MLE26PRFZW

5 YEAR LIMITED ALL PARTS WARRANTY
MAYTAG® COMMERCIAL LAUNDRY

AMERICA
AN AMERICAN COMPANY FOR OVER 100 YEARS

See maytagcommerciallaundry.com for warranty details.

VISIT MAYTAGCOMMERCIALLAUNDRY.COM FOR MORE INFORMATION.

®/™ © 2026 Maytag. All rights reserved.
MY260562 08/26

COMBINATION STACK DRYER/DRYER – 60 Hz

MLE/MLG26PDF MLE/MLG26PRL
MLE/MLG26PRF MLE/MLG27PDF MLG27PRF

SIDE VIEW

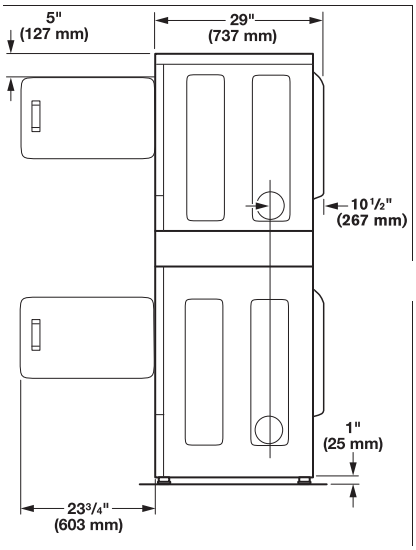

BACK VIEW

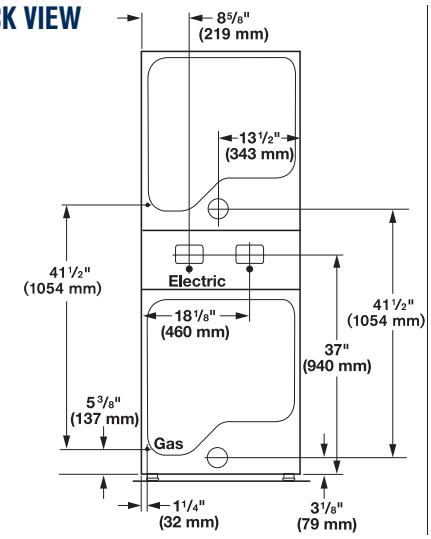

MAXIMUM EXHAUST DUCT LENGTH PER NUMBER OF TURNS

Number of 90° Turns	Rigid Metal Vent	
	Box Hood and Louvered Style	Angled Hood Style
0	130 ft. (39.6 m)	129 ft. (39.3 m)
1	125 ft. (38.1 m)	119 ft. (36.3 m)
2	115 ft. (35.1 m)	109 ft. (33.2 m)
3	106 ft. (32.3 m)	100 ft. (30.5 m)
4	98 ft. (29.9 m)	92 ft. (28.0 m)

Maximum length of vent system depends upon the type of vent used, number of elbows, and type of exhaust hood. For vent systems not covered by the vent specification chart, see your parts distributor.

MODELS	MLE26 (PD/PR) MLE27 (PD)	MLG26 (PD/PR) MLG27 (PD)	MLE26 (PR) MLE27 (PD)
FUEL TYPE	Electric	Gas	Electric (Canada)
CAPACITY			
Cylinder Volume — cu. ft. (liters)	7.4 (209.5)	7.4 (209.5)	7.4 (209.5)
Cylinder Diameter — in. (mm)	26.26 (667)	26.26 (667)	26.26 (667)
Cylinder Depth — in. (mm)	23.2 (590)	23.2 (590)	23.2 (590)
DIMENSIONS			
Width — in. (mm)	27 (686)	27 (686)	27 (686)
Depth — in. (mm)	29 (737)	29 (737)	29 (737)
Height — in. (mm) PR models	74.25 (1,886)	74.25 (1,886)	74.25 (1,886)
Height — in. (mm) PD models	76.75 (1,950)	76.75 (1,950)	76.75 (1,950)
Door Opening — in. (mm)	20.25 (514)	20.25 (514)	20.25 (514)
Exhaust Duct Diameter — in. (mm)	4 (101.6)*	4 (101.6)*	4 (101.6)*
CRATED DIMENSIONS			
Crated Width — in. (mm)	28.7 (730)	28.7 (730)	28.7 (730)
Crated Depth — in. (mm)	33.4 (848)	33.4 (848)	33.4 (848)
Crated Height — in. (mm)	79.1 (2008)	79.1 (2008)	79.1 (2008)
APPROXIMATE WEIGHT			
Uncrated — lb (kg) Coin Drop Models	272 (123.4)	275 (124.7)	275 (124.7)
Uncrated — lb (kg) Card Ready & Non-Vend Models	250 (113.4)	250 (113.4)	250 (113.4)
Crated — lb (kg) Coin Drop Models	294 (133.4)	294 (133.4)	294 (133.4)
Crated — lb (kg) Card Ready & Non-Vend Models	275 (124.7)	275 (124.7)	275 (124.7)
ELECTRICAL REQUIREMENTS			
Voltage	240V – 60Hz	120V – 60Hz	240V – 60Hz
Breaker/Fuse — amps	30	15	30
Airflow — CFM (CMM)	200 (5.7)	215 (6.1)	215 (6.1)
Electric Heating Element (watts)	5,600	N/A	5,250
Gas Rating — BTU/hr (kcal/hr)	N/A	22,000 (5,544)	N/A
Gas Inlet Size — in.	N/A	3/8 N.P.T.	N/A
Motor Size — HP (kW)	1/3 (.25)	1/3 (.25)	1/3 (.25)

*Use 4" (100 mm) diameter rigid aluminum or galvanized steel duct. Never use plastic, non-metal or combustible duct.
See specific instructions for proper installation. Because of continuous product improvement, Maytag reserves the right to change specifications without notice.
Export model ships without coin-drop mechanism.

VISIT MAYTAGCOMMERCIALLAUNDRY.COM FOR MORE INFORMATION.

®/™ © 2026 Maytag. All rights reserved.
MY260562 08/26