SINGLE-LOAD TOP-LOAD MATCHING DRYERS – 50 Hz

MDE/MDG20PDFGW



COIN DROP EQUIPPED
MDE20PDFGW pictured
(Also available in Gas)



NON-VEND
MDE20MNAGW pictured
(Also available in Gas)

TURBOVENT® SYSTEM*

- A high-speed blower wheel optimizes performance in long vents
- High airflow helps reduce drying times for a wide variety of loads
- Helps to increase efficiency and turns over the life of the machine

CONTROLS TO MEET YOUR NEEDS

- Mechanical controls provide a simple user interface with robust, easy-to-use knobs (MDE/G20MN)
- Get flexibility and individual cycle pricing options for optimal earnings through Intelligent Controls with M-Series Technology, while end users can easily choose their preferred wash experience with one-touch cycle selection (MDE/G20PD)
- USB port enables the import and export of cycle settings, audit data, and software updates

LARGE CAPACITY

- 7.4 cu. ft. capacity dryer allows for large loads to be dried efficiently and effectively
- Delivers an optimal drying experience for users and helps maximize productivity

BUILT TO LAST

- Commercial-grade finish on the dryer top provides a tough layer of protection for long-lasting performance and durability
- Full-wrap console is designed to help protect the internal components
- Front-panel accessibility provides fast entry to internal components for streamlined self-service
- Extra-large reversible door provides users unhindered access while loading and unloading

SINGLE-LOAD TOP-LOAD MATCHING DRYER MODELS — 50 Hz		
PAYMENT CONFIGURATION	**ELECTRIC**	**GAS**
Coin Drop Equipped	MDE20PDFGW	MDG20PDFGW
Non-Vend	MDE20MNAGW	MDG20MNAGW

5 YEAR LIMITED ALL PARTS WARRANTY
MAYTAG® COMMERCIAL LAUNDRY

AMERICA
AN AMERICAN COMPANY FOR OVER 100 YEARS

*On select models
See maytagcommerciallaundry.com for warranty details.

VISIT MAYTAGCOMMERCIALLAUNDRY.COM FOR MORE INFORMATION.

®/™ © 2026 Maytag. All rights reserved.
MY260561 08/26

SINGLE-LOAD TOP-LOAD MATCHING DRYERS – 50 Hz

MDE/MDG20PDFGW

SIDE VIEW

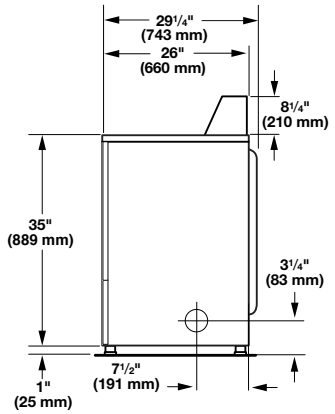

BACK VIEW

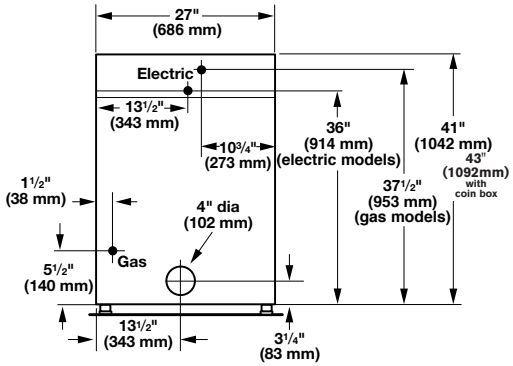

MAXIMUM EXHAUST DUCT LENGTH PER NUMBER OF TURNS

Number of 90° Turns	Rigid Metal Vent	
	Box Hood and Louvered Style	Angled Hood Style
0	64 ft. (19.5 m)	58 ft. (17.7 m)
1	54 ft. (16.5 m)	48 ft. (14.6 m)
2	44 ft. (13.4 m)	38 ft. (11.6 m)
3	35 ft. (10.7 m)	29 ft. (8.8 m)
4	27 ft. (8.2 m)	21 ft. (6.4 m)

*Includes height of metercase for coin drop and coin slide models
**Use 4" (101.6 mm) diameter rigid aluminum or galvanized steel duct. Never use plastic, non-metal, or combustible duct.

Dimensions are for planning purposes only. See specific instructions for proper installation. Because of continuous product improvement, Maytag reserves the right to change specifications without notice.

MODELS COIN DROP NON-VEND	MDE20PDFGW MDE20MNAGW	MDG20PDFGW MDG20MNAGW
Fuel Type	**Electric**	**Gas**
CAPACITY		
Cylinder Volume — cu. ft. (liters)	7.4 (210)	7.4 (210)
Cylinder Diameter — in. (mm)	26.26 (667)	26.26 (667)
Cylinder Depth — in. (mm)	23.2 (590)	23.2 (590)
DIMENSIONS		
Width — in. (mm)	27 (686)	27 (686)
Depth — in. (mm)	29.25 (743)	29.25 (743)
Height — in. (mm)	43 (1,092)*	43 (1,092)*
Door Opening — in. (mm)	20.25 (514)	20.25 (514)
Exhaust Duct Diameter — in. (mm)	4 (101.6)**	4 (101.6)**
CRATED DIMENSIONS		
Crated Width — in. (mm)	28.8 (731)	28.8 (731)
Crated Depth — in. (mm)	30.8 (782)	30.8 (782)
Crated Height — in. (mm)	44.65 (1,134)	44.65 (1,134)
APPROXIMATE WEIGHT		
Uncrated — lb (kg) Coin Drop & Coin Slide Models	125 (56.7)	142 (64.4)
Uncrated — lb (kg) Card Ready & Non-Vend Models	115 (52.2)	127 (57.6)
Crated — lb (kg) Coin Drop & Coin Slide Models	135 (61.2)	152 (68.9)
Crated — lb (kg) Card Ready & Non-Vend Models	125 (56.7)	137 (62.1)
ELECTRICAL REQUIREMENTS		
Voltage	220-240V	220-240V
Breaker/Fuse — Amps	25	10
Airflow — CFM (CMM)	215 (6.10)	230 (6.50)
Electric Heating Element (watts)	4,600	N/A
Gas Rating — BTU/hr (kcal/hr)	N/A	20,000 (5,040)
Gas Inlet Size — in.	N/A	⅜ N.P.T.
Motor Size — HP (kW)	⅓ (.25)	⅓ (.25)

VISIT MAYTAGCOMMERCIALLAUNDRY.COM FOR MORE INFORMATION.

®/™ © 2026 Maytag. All rights reserved.
MY260561 08/26