SINGLE-LOAD TOP-LOAD MATCHING DRYERS – 60 Hz

MDE20 AND MDG20



COIN DROP EQUIPPED
MDE20PDFYW pictured
(Also available in Gas)



CANADA COIN DROP EQUIPPED
MDE20PDFZW pictured
(Also available in Gas)



CARD READER READY
MDE20PRFYW pictured
(Also available in Gas)



COIN SLIDE READY
MDE20CSAYW pictured
(Also available in Gas)



NON-VEND
MDE20MNAYW pictured
(Also available in Gas)

EASILY REMOVABLE FRONT ACCESS PANEL

- Provides fast entry to internal components for streamlined self-service

CONTROLS TO MEET YOUR NEEDS

- Mechanical controls provide a simple user interface with robust, easy-to-use knob. (MDE/G20CS and MDE/G20MN)
- Get flexibility and individual cycle pricing options for optimal earnings through Intelligent Controls with M-Series Technology, while end users can easily choose their preferred wash experience with one-touch cycle selection (MDE/G20PD and MDE/G20PR)
- USB port enables the import and export of cycle settings, audit data, and software updates

LARGE CAPACITY

- 7.4 cu. ft. capacity dryer allows for large loads to be dried efficiently and effectively
- Delivers an optimal drying experience for users and helps maximize productivity

BUILT TO LAST

- Commercial-grade finish on the dryer top provides a tough layer of protection for long-lasting performance and durability
- Full-wrap console is designed to help protect the internal components
- Extra-large reversible door provides users unhindered access while loading and unloading

SINGLE-LOAD TOP-LOAD MATCHING DRYER MODELS — 60Hz			
PAYMENT CONFIGURATION	ELECTRIC	GAS	CANADA ELECTRIC
Coin Drop Equipped	MDE20PDFYW	MDG20PDFWW	MDE20PDFZW
Card Reader Ready/ Non-Vend	MDE20PRFYW	MDG20PRFWW	MDE20PRFZW
Coin Slide Ready	MDE20CSAYW	MDG20CSAWW	MDE20CSAZW
Non-Vend	MDE20MNAYW	MDG20MNAWW	MDE20MNAZW

5 YEAR LIMITED ALL PARTS WARRANTY
MAYTAG® COMMERCIAL LAUNDRY

AMERICA
AN AMERICAN COMPANY FOR OVER 100 YEARS

See maytagcommerciallaundry.com for warranty details.

VISIT MAYTAGCOMMERCIALLAUNDRY.COM FOR MORE INFORMATION.

®/™ © 2026 Maytag. All rights reserved.
MY260560 08/26

SINGLE-LOAD TOP-LOAD MATCHING DRYERS – 60 Hz

MDE20 AND MDG20

SIDE VIEW

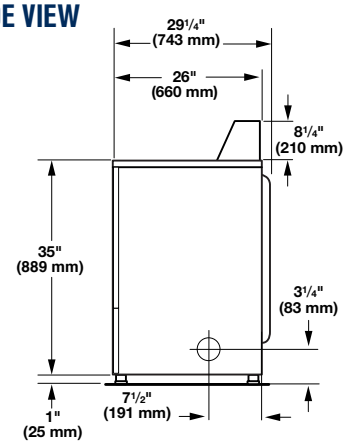

BACK VIEW

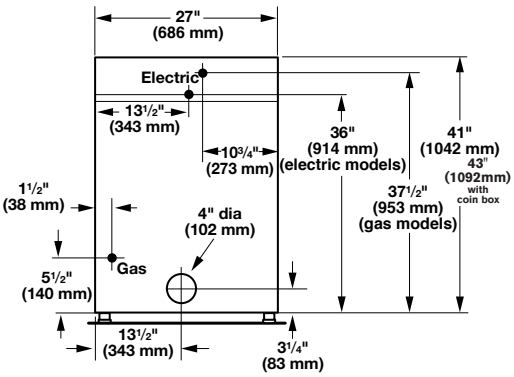

MAXIMUM EXHAUST DUCT LENGTH PER NUMBER OF TURNS

Number of 90° Turns	Rigid Metal Vent	
	Box Hood and Louvered Style	Angled Hood Style
0	64 ft. (19.5 m)	58 ft. (17.7 m)
1	54 ft. (16.5 m)	48 ft. (14.6 m)
2	44 ft. (13.4 m)	38 ft. (11.6 m)
3	35 ft. (10.7 m)	29 ft. (8.8 m)
4	27 ft. (8.2 m)	21 ft. (6.4 m)

*Includes height of metercase for coin drop and coin slide models
**Use 4" (101.6 mm) diameter rigid aluminum or galvanized steel duct. Never use plastic, non-metal, or combustible duct.

Dimensions are for planning purposes only. See specific instructions for proper installation. Because of continuous product improvement, Maytag reserves the right to change specifications without notice.

MODELS COIN DROP/COIN SLIDE/CARD READER READY NON-VEND	MDE20 (PD/CS/PR) MDE20 (MN)	MDG20 (PD/CS/PR) MDG20 (MN)	MDE20 (PD/CS/PR) MDE20 (MN)
FUEL TYPE	**Electric**	**Gas**	**Electric (Canada)**
CAPACITY			
Cylinder Volume — cu. ft. (liters)	7.4 (210)	7.4 (210)	7.4 (210)
Cylinder Diameter — in. (mm)	26.26 (667)	26.26 (667)	26.26 (667)
Cylinder Depth — in. (mm)	23.2 (590)	23.2 (590)	23.2 (590)
DIMENSIONS			
Width — in. (mm)	27 (686)	27 (686)	27 (686)
Depth — in. (mm)	29.25 (743)	29.25 (743)	29.25 (743)
Height — in. (mm)	43 (1,092)*	43 (1,092)*	41 (1,042)*
Door Opening — in. (mm)	20.25 (514)	20.25 (514)	20.25 (514)
Exhaust Duct Diameter — in. (mm)	4 (101.6)**	4 (101.6)**	4 (101.6)**
CRATED DIMENSIONS			
Crated Width — in. (mm)	28.8 (731)	28.8 (731)	28.8 (731)
Crated Depth — in. (mm)	30.8 (782)	30.8 (782)	30.8 (782)
Crated Height — in. (mm)	44.65 (1,134)	44.65 (1,134)	44.65 (1,134)
APPROXIMATE WEIGHT			
Uncrated — lb (kg) Coin Drop & Coin Slide Models	125 (56.7)	130 (59)	125 (56.7)
Uncrated — lb (kg) Card Ready & Non-Vend Models	115 (52.2)	120 (54.4)	115 (52.2)
Crated — lb (kg) Coin Drop & Coin Slide Models	135 (61.2)	140 (63.5)	135 (61.2)
Crated — lb (kg) Card Ready & Non-Vend Models	125 (56.7)	130 (59)	125 (56.7)
ELECTRICAL REQUIREMENTS			
Voltage	240V	120V	240V
Breaker/Fuse — Amps	30	15	30
Airflow — CFM (CMM)	178 (6.10)	183 (6.50)	178 (6.10)
Electric Heating Element (watts)	5,600	N/A	5,250
Gas Rating — BTU/hr (kcal/hr)	N/A	22,000 (5,544)	N/A
Gas Inlet Size — in.	N/A	⅜ N.P.T.	N/A
Motor Size — HP (kW)	⅓ (.25)	⅓ (.25)	⅓ (.25)

VISIT MAYTAGCOMMERCIALLAUNDRY.COM FOR MORE INFORMATION.

®/™ © 2026 Maytag. All rights reserved.
MY260560 08/26