SINGLE-LOAD TOP-LOAD MATCHING DRYERS

MDE/MDG20MNTGW, MDG20MNTKW



NON-VEND
MDE20MNTGW pictured
(Also available in Gas)

TURBOVENT® SYSTEM

- With 100 feet of venting capability, the Turbovent® system allows for long vent installations while maintaining high performance
- High-speed blower increases airflow

CONTROLS TO MEET YOUR NEEDS

- Simple user interface with robust, easy-to-use knobs
- In-use light helps keep users informed

LARGE CAPACITY

- 7.4 cu. ft. capacity dryer helps allow for large loads to be dried efficiently and effectively
- 10.5 kg rated capacity
- Delivers an optimal drying experience for users and helps maximize productivity
- Extra-large reversible door — provides users unhindered access while loading and unloading

BUILT TO LAST

- Commercial-grade finish on the dryer top provides a tough layer of protection for long-lasting performance and durability
- Full wrap console is designed to help protect the internal components
- Front-panel accessibility provides access to several routine maintenance and service tasks
- Four-roller suspension provides dependable operation and longer life

5 YEAR LIMITED ALL PARTS WARRANTY
MAYTAG® COMMERCIAL LAUNDRY

AMERICA
AN AMERICAN COMPANY FOR OVER 100 YEARS

See maytagcommerciallaundry.com for warranty details.

End user benefits

VISIT MAYTAGCOMMERCIALLAUNDRY.COM FOR MORE INFORMATION.

®/™ © 2026 Maytag. All rights reserved.
MY260558 08/26

SINGLE-LOAD TOP-LOAD MATCHING DRYERS

MDE/MDG20MNTGW, MDG20MNTKW

SIDE VIEW

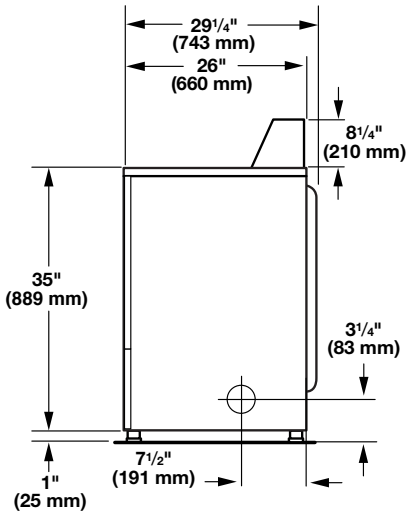

BACK VIEW

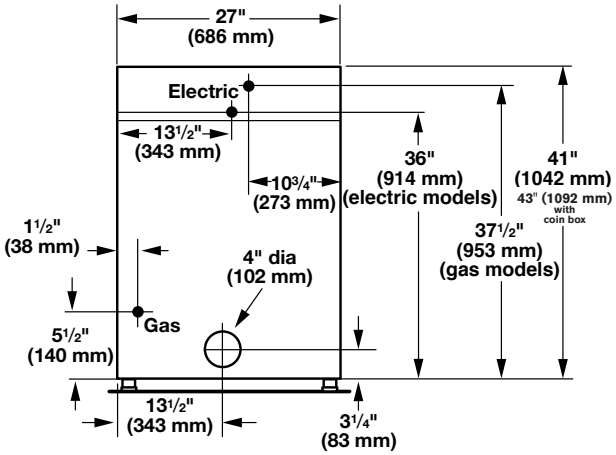

MAXIMUM EXHAUST DUCT LENGTH PER NUMBER OF TURNS

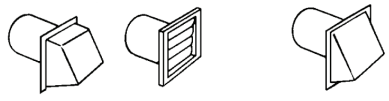

Number Of 90° Turns	Rigid Metal Vent: Box Hood and Louvered Style	Rigid Metal Vent: Angled Hood Style
0	64 ft. (19.5 m)	58 ft. (17.7 m)
1	54 ft. (16.5 m)	48 ft. (14.6 m)
2	44 ft. (13.4 m)	38 ft. (11.6 m)
3	35 ft. (10.7 m)	29 ft. (8.8 m)
4	27 ft. (8.2 m)	21 ft. (6.4 m)

MODELS	MDE20MNTGW	MDG20MNTGW	MDG20MNTKW Phillipines
PAYMENT CONFIGURATION	Non-Vend		
FUEL TYPE	Electric	Gas	Gas
CAPACITY			
Cylinder Volume — cu. ft. (liters)	7.4 (210)	7.4 (210)	7.4 (210)
Cylinder Diameter — in. (mm)	26.26 (667)	26.26 (667)	26.26 (667)
Cylinder Depth — in. (mm)	23.2 (590)	23.2 (590)	23.2 (590)
IEC Capacity — lb. (kg)	23.2 (10.5)	23.2 (10.5)	23.2 (10.5)
DIMENSIONS			
Width — in. (mm)	27 (686)	27 (686)	27 (686)
Depth — in. (mm)	29.25 (743)	29.25 (743)	29.25 (743)
Height — in. (mm)	43 (1,092)*	43 (1,092)*	43 (1,092)*
Door Opening — in. (mm)	20.25 (514)	20.25 (514)	20.25 (514)
Exhaust Duct Diameter — in. (mm)	4 (102)**	4 (102)**	4 (102)**
CRATED DIMENSIONS			
Crated Width — in. (mm)	28.8 (731)	28.8 (731)	28.8 (731)
Crated Depth — in. (mm)	30.8 (782)	30.8 (782)	30.8 (782)
Crated Height — in. (mm)	44.65 (1,134)	44.65 (1,134)	44.65 (1,134)
APPROXIMATE WEIGHT			
Uncrated — lb. (kg)	115 (52.2)	127 (57.6)	127 (57.6)
Crated — lb. (kg)	125 (56.7)	137 (62.1)	137 (62.1)
ELECTRICAL REQUIREMENTS			
Voltage	220-240V	220-240V	220-240V
Frequency	50Hz	50Hz	60Hz
Breaker/Fuse — Amps	25	10	10
Airflow — CFM (CMM)	215 (6.10)	230 (6.50)	230 (6.50)
Electric Heating Element (watts)	4,600	N/A	N/A
Gas Rating — BTU/hr (kcal/hr)	N/A	20,000 (5,040)	20,000 (5,040)
Gas Inlet Size — in.	N/A	⅜ N.P.T.	⅜ N.P.T.
Motor Size — HP (kW)	⅓ (.25)	⅓ (.25)	⅓ (.25)

*Includes height of metercase for coin drop and coin slide models
**Use 4" (102 mm) diameter rigid aluminum or galvanized steel duct. Never use plastic, non-metal, or combustible duct.
Dimensions are for planning purposes only. See specific instructions for proper installation. Because of continuous product improvement, Maytag reserves the right to change specifications without notice.

®/™ © 2026 Maytag. All rights reserved.
MY260558 08/26