SINGLE-LOAD FRONT-LOAD DRYERS

MDE/MDG28PRTGW, MDG28PRTKW



CARD READY AND NON-VEND
MDE/MDG28PRTGW, MDG28PRTKW

TURBOVENT® SYSTEM

- With 100 feet of venting capability, the Turbovent® system allows for long vent installations while maintaining high performance
- High-speed blower increases airflow

MICROPROCESSOR CONTROLS

- Provide flexibility to price both base cycles and cycle modifiers to help mazimize earnings
- Built-in diagnostics assist with quick identification of issues
- Time Remaining Display keeps users informed
- One-touch cycle selection allows end users to choose their preferred dry cycle

LARGE CAPACITY

- 6.7 cu. ft. capacity dryer helps allow for large loads to be dried efficiently and effectively
- 10.5 kg rated capacity
- Delivers an optimal drying experience for users and helps maximize productivity
- Large reversible door — provides unhindered access while loading and unloading

BUILT TO LAST

- Commercial-grade finish on the dryer top provides a tough layer of protection for long-lasting performance and durability
- Four-Roller Suspension provides dependable operation and longer life

7 5 YEAR LIMITED WARRANTY
MAYTAG® COMMERCIAL LAUNDRY

AMERICA
AN AMERICAN COMPANY FOR OVER 100 YEARS

See maytagcommerciallaundry.com for warranty details.

End user benefits

VISIT MAYTAGCOMMERCIALLAUNDRY.COM FOR MORE INFORMATION.

®/™ © 2026 Maytag. All rights reserved.
MY260556 08/26

SINGLE-LOAD FRONT-LOAD DRYERS

MDE/MDG28PRTGW, MDG28PRTKW

SIDE VIEW

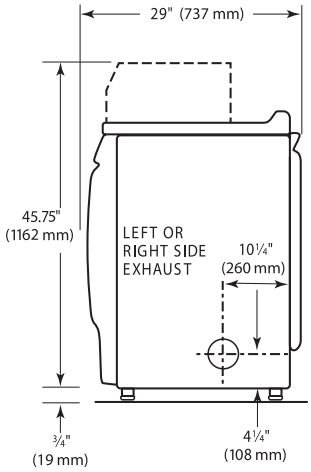

BACK VIEW

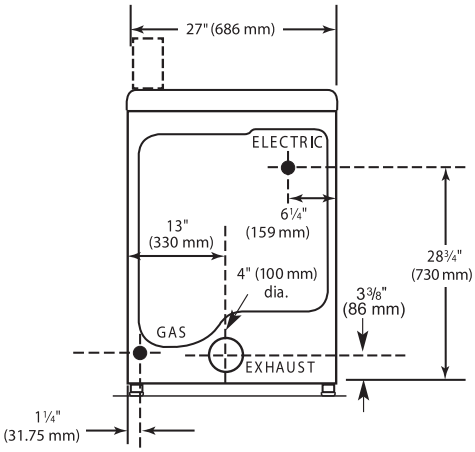

MAXIMUM EXHAUST DUCT LENGTH PER NUMBER OF TURNS

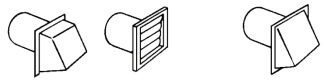

Number Of 90° Turns	Rigid Metal Vent	
	Box Hood and Louvered Style	Angled Hood Style
0	39.6 m (130 ft.)	39.3 m (129 ft.)
1	38.1 m (125 ft.)	36.3 m (119 ft.)
2	35.1 m (115 ft.)	33.2 m (109 ft.)
3	32.3 m (106 ft.)	30.5 m (100 ft.)
4	29.9 m (98 ft.)	28.0 m (92 ft.)

MODELS	MDE28PRTGW	MDG28PRTGW	MDG28PRTKW Phillipines
PAYMENT CONFIGURATION	Card Ready & Non-Vend		
FUEL TYPE	Electric	Gas	Gas
CAPACITY			
Cylinder Volume — cu. ft. (liters)	6.7 (190)	6.7 (190)	6.7 (190)
Cylinder Diameter — in. (mm)	26.26 (667)	26.26 (667)	26.26 (667)
Cylinder Depth — in. (mm)	20.39 (518)	20.39 (518)	20.39 (518)
IEC Capacity — lb. (kg)	23.2 (10.5)	23.2 (10.5)	23.2 (10.5)
DIMENSIONS			
Width — in. (mm)	27 (686)	27 (686)	27 (686)
Depth — in. (mm)	29 (737)	29 (737)	29 (737)
Height — in. (mm)	45.75 (1162)*	45.75 (1162)*	45.75 (1162)*
Door Opening — in. (mm)	18.25 (464)	18.25 (464)	18.25 (464)
Exhaust Duct Diameter — in. (mm)	4 (102)**	4 (102)**	4 (102)**
CRATED DIMENSIONS			
Crated Width — in. (mm)	29.06 (738.12)	29.06 (738.12)	29.06 (738.12)
Crated Depth — in. (mm)	30.5 (775)	30.5 (775)	30.5 (775)
Crated Height — in. (mm)	45.63 (1159)	45.63 (1159)	45.63 (1159)
APPROXIMATE WEIGHT			
Uncrated — lb. (kg)	147 (67)	150 (68)	150 (68)
Crated — lb. (kg)	160 (73)	163 (74)	163 (74)
ELECTRICAL REQUIREMENTS			
Voltage	220-240V	220-240V	220-240V
Frequency	50Hz	50Hz	60Hz
Breaker/Fuse — Amps	30	15	15
Airflow — CFM (CMM)	215 (6.1)	230 (6.5)	230 (6.5)
Electric Heating Element (watts)	4,600	N/A	N/A
Gas Rating — BTU/hr (kcal/hr)	N/A	20,000 (5,040)	20,000 (5,040)
Gas Inlet Size — in.	N/A	3/8 N.P.T.	3/8 N.P.T.
Motor Size — HP (kW)	1/3 (.25)	1/3 (.25)	1/3 (.25)

*Includes height of metercase.

**Use 4" (102 mm) diameter rigid aluminum or galvanized steel duct. Never use plastic, non-metal or combustible duct.

See specific instructions for proper installation. Because of continuous product improvement, Maytag reserves the right to change specifications without notice.

Export model ships without coin-drop mechanism.

®/™ © 2026 Maytag. All rights reserved.
MY260556 08/26