BOTTOM MOUNT FRENCH DOOR REFRIGERATOR

MODELS:

WRF757SDHZ02 (Stainless Steel)
WRF757SDHV02 (Black Stainless)

11/04/2020
© 2020 Whirlpool Corporation
Part No. W11483482 Rev. B

CABINET PARTS

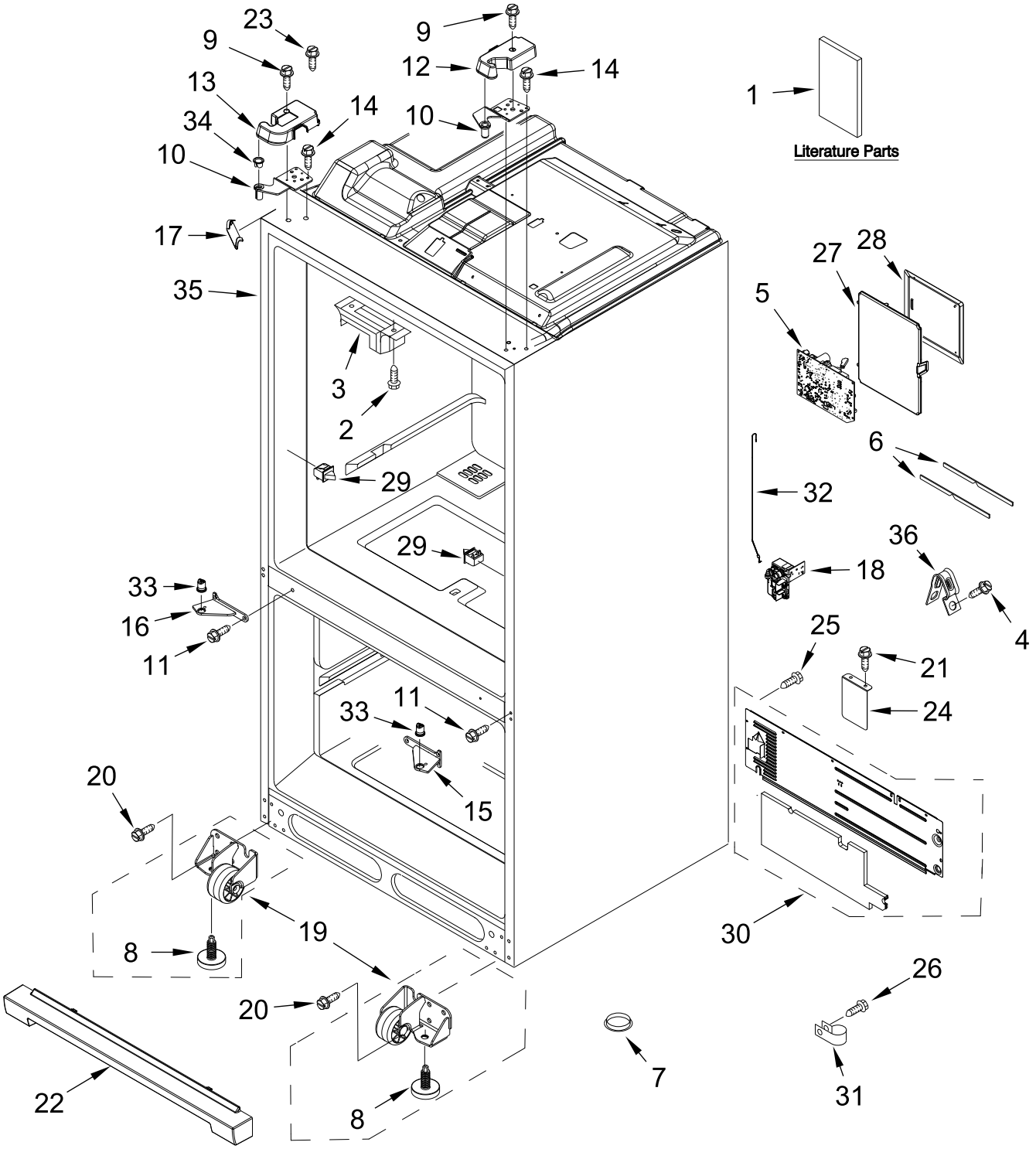

CABINET PARTS

Illus. No.	Part No.	Description
1		Literature Parts
		Tech Sheet
	W11431924	English
	W11431925	French
	W11307496	Wiring Diagram
	W11223078	Energy Guide
	W11382583	Use and Care Guide
2	12990302	Screw
3	W10344432	Block, Pivot
4	W10141645	Screw
5	W11161172	Board, Control
6	W10415341	Gasket, HV Box
7	A3076901	Plug, Button
8	W10141622	Brake, Roller
9	12992602	Screw
10		Hinge, Top
	W10248410	Left Hand
	W10248409	Right Hand
11	W10673840	Screw (Stainless)
	W10673842	Screw (Black)
12		Cover, Hinge (Right)
	W10407158	Grey
	W10407157	Black
13		Cover, Hinge (Left)
		(Includes Foil)
	W10471618	Grey
	W10471617	Black
14	W10731474	Screw
15		Hinge, Center (Right)
	W10248703	Grey
	W10248702	Black
16		Hinge, Center (Left)
	W10248706	Grey
	W10248705	Black
17		Cover, Corner
	12587703AP	Grey
	12587703B	Black
18	W11460084	Valve, Water
19		Assembly, Roller
	W10515763	Left Hand
	W10515762	Right Hand
20	W10709365	Screw
21	12990702	Screw
22		Grille, Toe
	W10637671	Grey
	W10637669	Black
23	12992601	Screw
24	W10336736	Cover, Roller
25	W10141645	Screw
26	12990511	Screw
27	W10768379	Lid, HV
28	W10754144	Cover, Control Box
29	W10847849	Switch, Light
30	W11364644	Assembly, Unit Cover
31	M0108107	Clamp, Tube
32	W11296599	Tube, Water
33	W10505294	Coupler, Door
34	W10212137	Retainer, Door
35		Cabinet (Not a Servicable Part)
36	549193	Clamp, Power Cord

REFRIGERATOR LINER PARTS

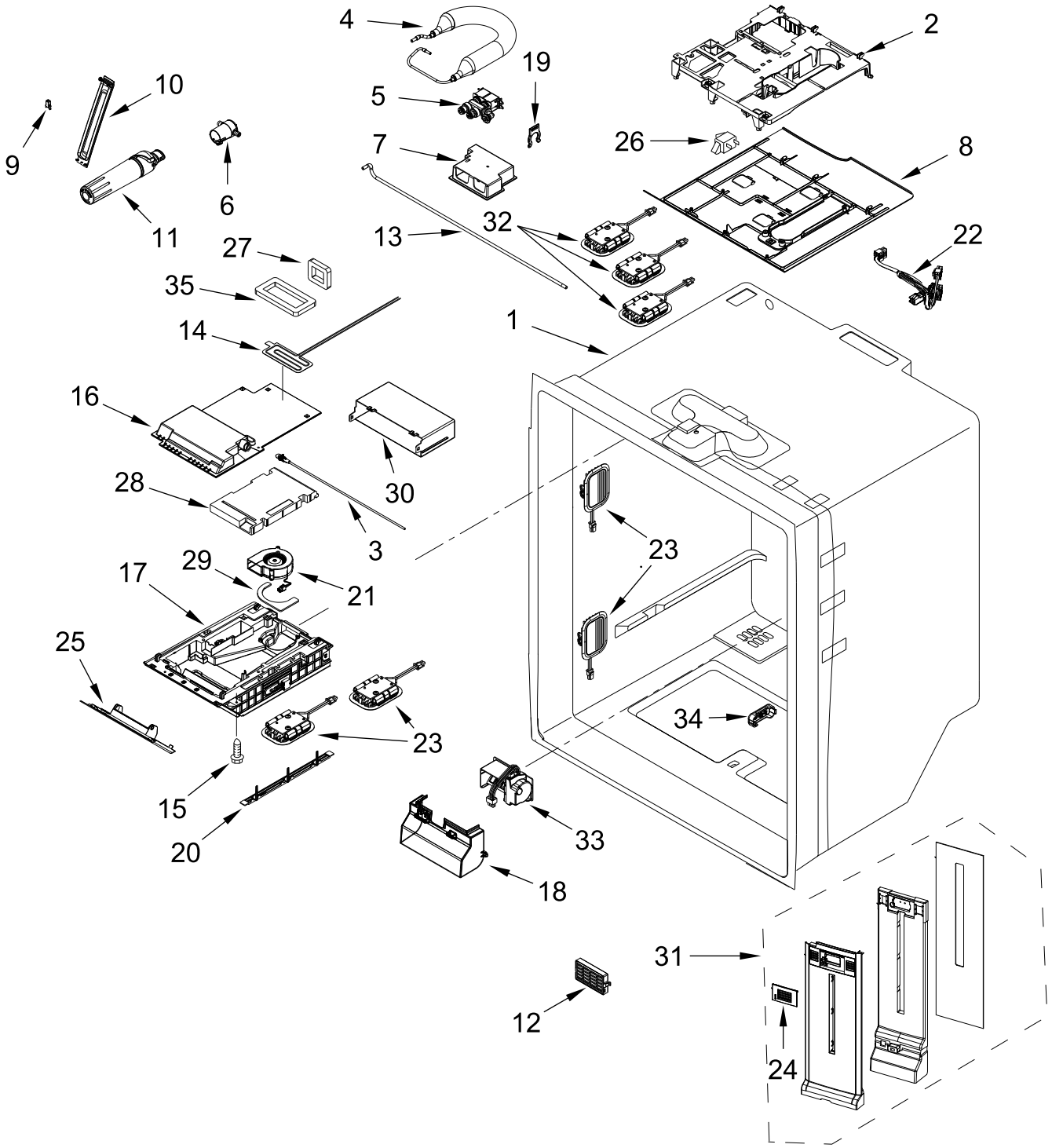

REFRIGERATOR LINER PARTS

Illus. No.	Part No.	Description
1		Liner (Not A Serviceable Part)
2	W11281629	Housing, Water System
3	W11306460	Tube, Fill
4	W11296598	Reservoir, Water (Also Order Wire Tie Part 8567668)
5	W11255718	Valve, Dual Water
6	W11293954	Housing, Water Filter
7	W11391457	Enclosure, Water Valve
8	W10669663	Cover, Waterbox
9	2223877	Latch, Push
10	W10277949	Door, Filter Access
11	W10680605	Filter, Water
12	W10315189	Filter, Air
13	W11306462	Waterline, Valve to Hinge
14	W10706850	Heater, Fill Tube
15	12990518	Screw
16	W10598013	Cover, Icebox
17	W11374557	Assembly, Icebox (Foamed)
18	W10530312	Cover, Damper
19	W11175631	Locking Ring (5/16)
20	W10505516	Trim, Icebox
21	W10833801	Fan, Icebox
22	W11369503	Wire Assembly, Jumper
23	W11228040	Assembly, LED Light Module
24	W11125218	Cover, Air Diffuser
25	W10553630	Assembly, Fascia (Includes Heater)
26	W10847853	Switch, Light
27	W10320706	Gasket, Rear Return
28	W10280983	Insulation
29	W10392172	Gasket, Fan
30	W10635022	Adapter, Icebox
31	W11373777	Assembly, Air Tower
32	W11234027	Harness, LED Wire (Includes LED lights)
33	W10479155	Damper, Control
34	W10438957	Cover, Thermistor
35	W10280988	Gasket, Rear Supply
		FOLLOWING PARTS NOT ILLUSTRATED
	W11306925	Harness, Dual Valve
	W11298842	Wire Assembly, Ice Box

FREEZER LINER PARTS

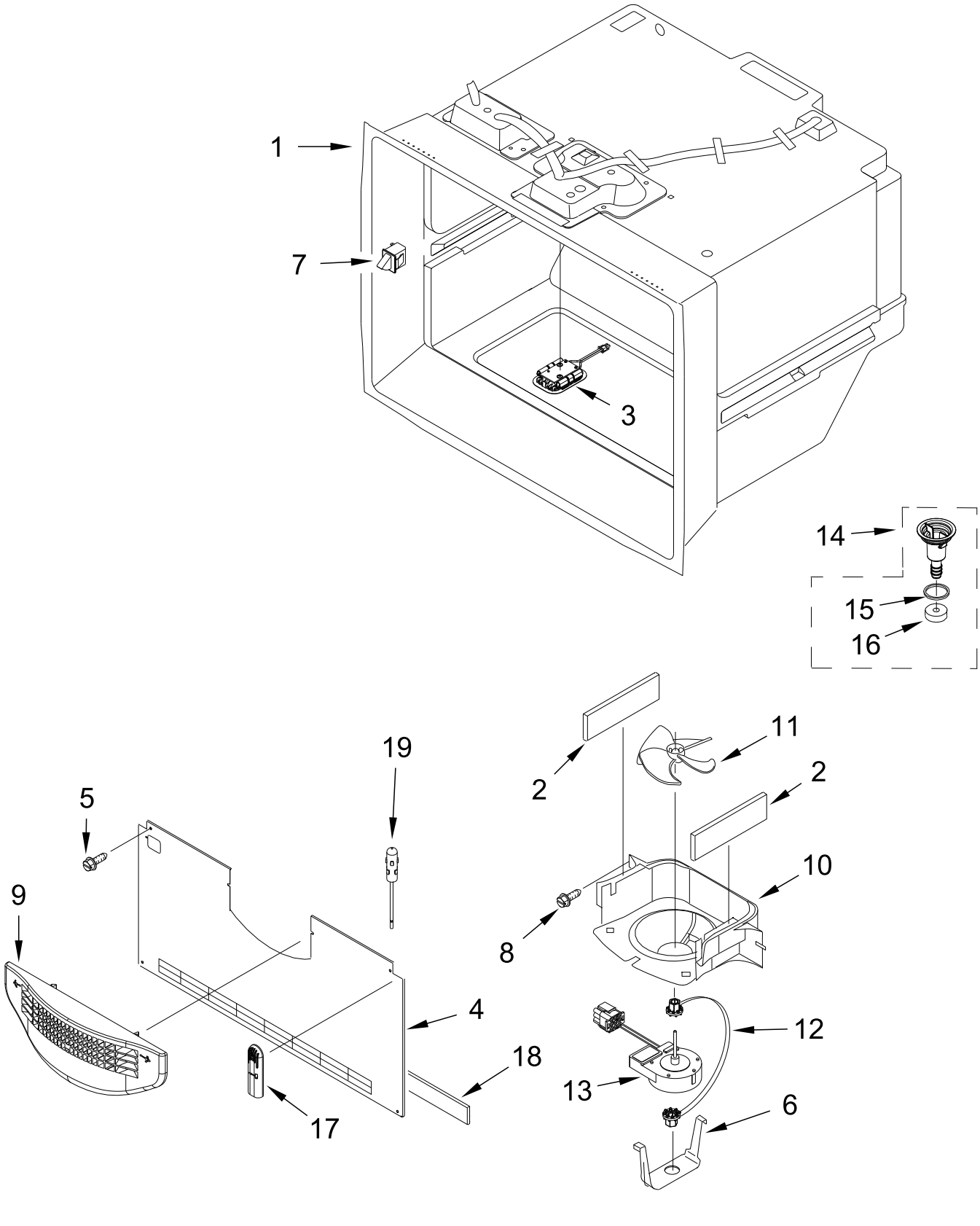

FREEZER LINER PARTS

Illus. No.	Part No.	Description
1		Liner (Not A Seviceable Part)
2	A3189392	Gasket, Foam
3	W11228040	Assembly, LED Light Module
4	W11282987	Cover, Evaporator (Freezer)
5	12990511	Screw
6	12956601	Clip, Fan Motor
7	W10847853	Switch, Light
8	12990504	Screw
9	W10496613	Grille, Air (Freezer)
10	W10363507	Shroud, Evaporator Fan
11	12986101	Blade, Fan
12	W10905511	Grommet, Fan Motor
13	W11215582	Motor, Evaporator (Includes Harness, Thermistor, and Defrost Thermostat)
14	W10503218	Assembly, Drain Funnel
15	M0500703	Seal
16	B8381501	Gasket, Drain
17	W10405166	Cover, Thermistor
18	W10531268	Gasket, Dual Evaporator
19	W10280385	Thermistor

REFRIGERATOR DOOR PARTS

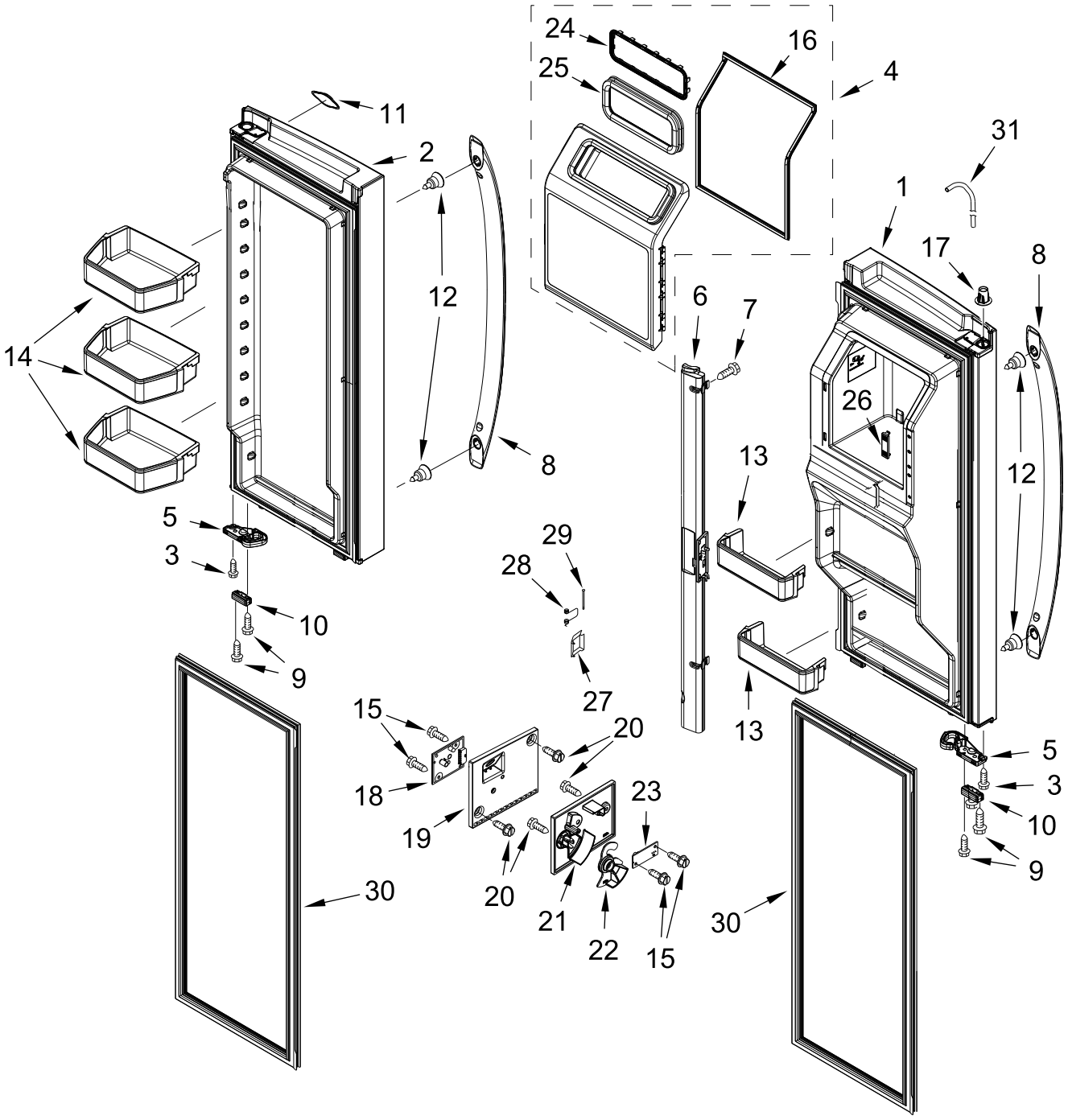

REFRIGERATOR DOOR PARTS

Illus. No.	Part No.	Description
1		Door, Left (Includes Gasket)
	W11405217	Stainless
	W11405219	Black Stainless
2		Door, Right (Includes Gasket)
	W11377901	Stainless
	W11036468	Black Stainless
3	W10238319	Screw
4	W10549592	Assembly, Ice Door
5		Latch, Door
	W10712952	Left Hand
	W10712953	Right Hand
6		Mullion, Door
	W10698199	Grey
	W10698196	Black
7	12990204	Screw
8		Handle, Door
	W11045530	Stainless
	W11101972	Black Stainless
9	12990504	Screw
10		Bumper, Door
	W10407188	Grey
	W10407187	Black
11	W10884773	Badge
12	W11328753	Screw
13	W10728185	Trivet, 2 Liter
14	W10728194	Bin, Gallon
15	12993001	Screw
16	W10347085	Gasket, Ice Compartment Door
17	W11315302	Clip, Tube
18	W10518658	Board, Receiver Circuit
19	W10258510	Cover, Receiver
20	489214	Screw
21	W10258502	Cover, Emitter
22	W10258540	Slide, Icemaker Shut Off
23	W10832970	Board, Emitter Circuit
24	W10400825	Retainer, Ice Chute
25	W10347087	Gasket, Ice Chute
26	W10646855	Vent, Thermistor
27	W10258520	Door, Emitter
28	2198635	Spring, Door
29	2198634	Pin, Door
30		Gasket, Door
	W10873938	Grey
	W10873939	Black
31	W10499015	Tube, Water

FREEZER DOOR PARTS

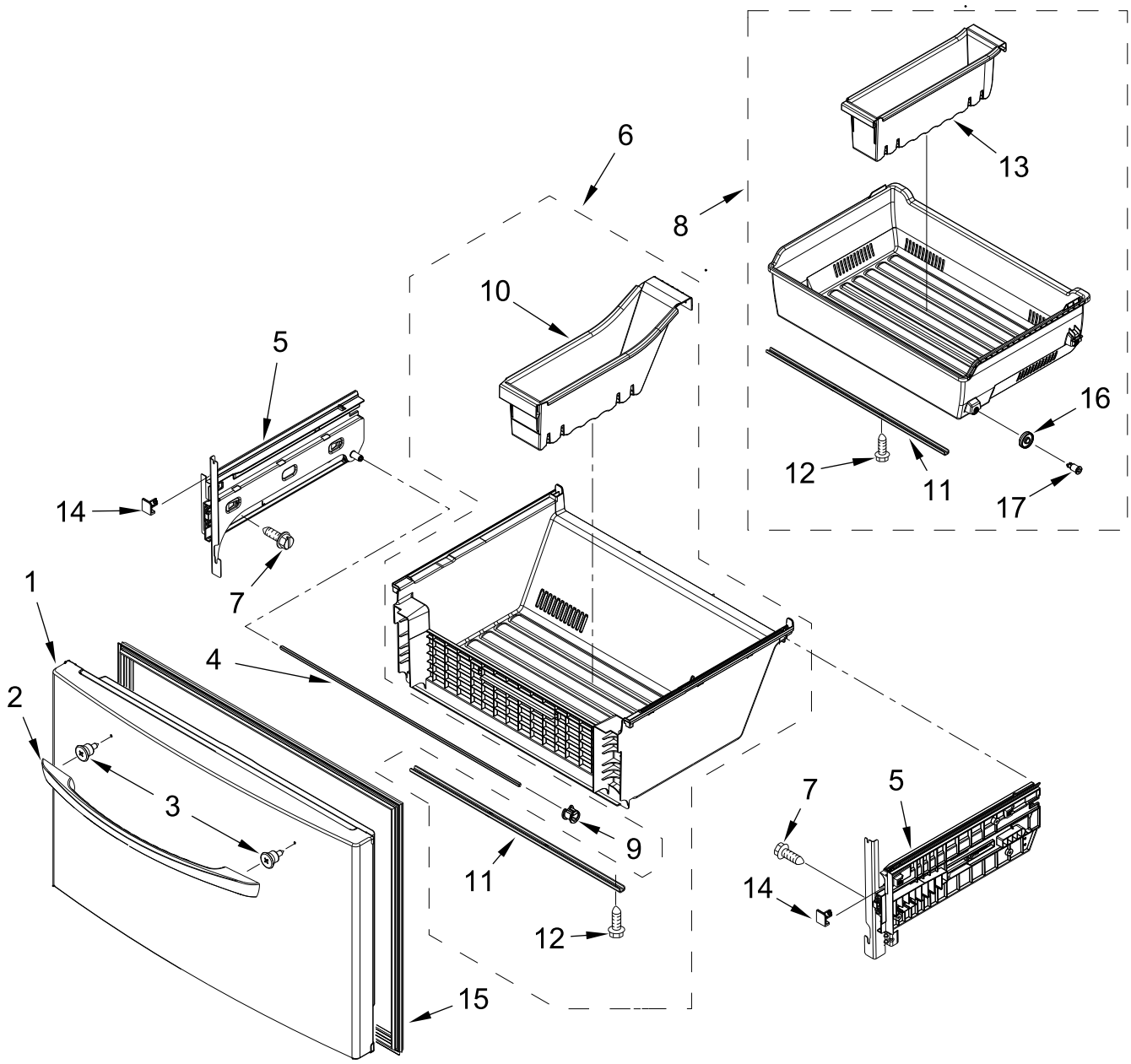

FREEZER DOOR PARTS

Illus. No.	Part No.	Description
1		Door, Freezer (Includes Gasket)
	W11377893	Stainless
	W11024129	Black Stainless
2		Handle, Door
	W11115761	Stainless
	W11101977	Black Stainless
3	W11328753	Screw
4	W10503522	Shaft
5		Assembly, Bracket
	W10795770	Left Hand
	W10795768	Right Hand
6	W10594047	Assembly, Lower Pan
7	12990518	Screw
8	W10704090	Bin, Upper
9	W10709748	Clip, Shaft
10	W10507444	Divider, Lower
11	W10469177	Support, Pan
12	489443	Screw (Stainless)
13	W10485654	Divider, Upper
14		Stop, Pan
	W10485096	Left Hand
	W10485089	Right Hand
15		Gasket, Door
	W10248749	Grey
	W10248748	Black
16	W10248555	Roller, Pan
17	W10643690	Axle, Roller

UNIT PARTS

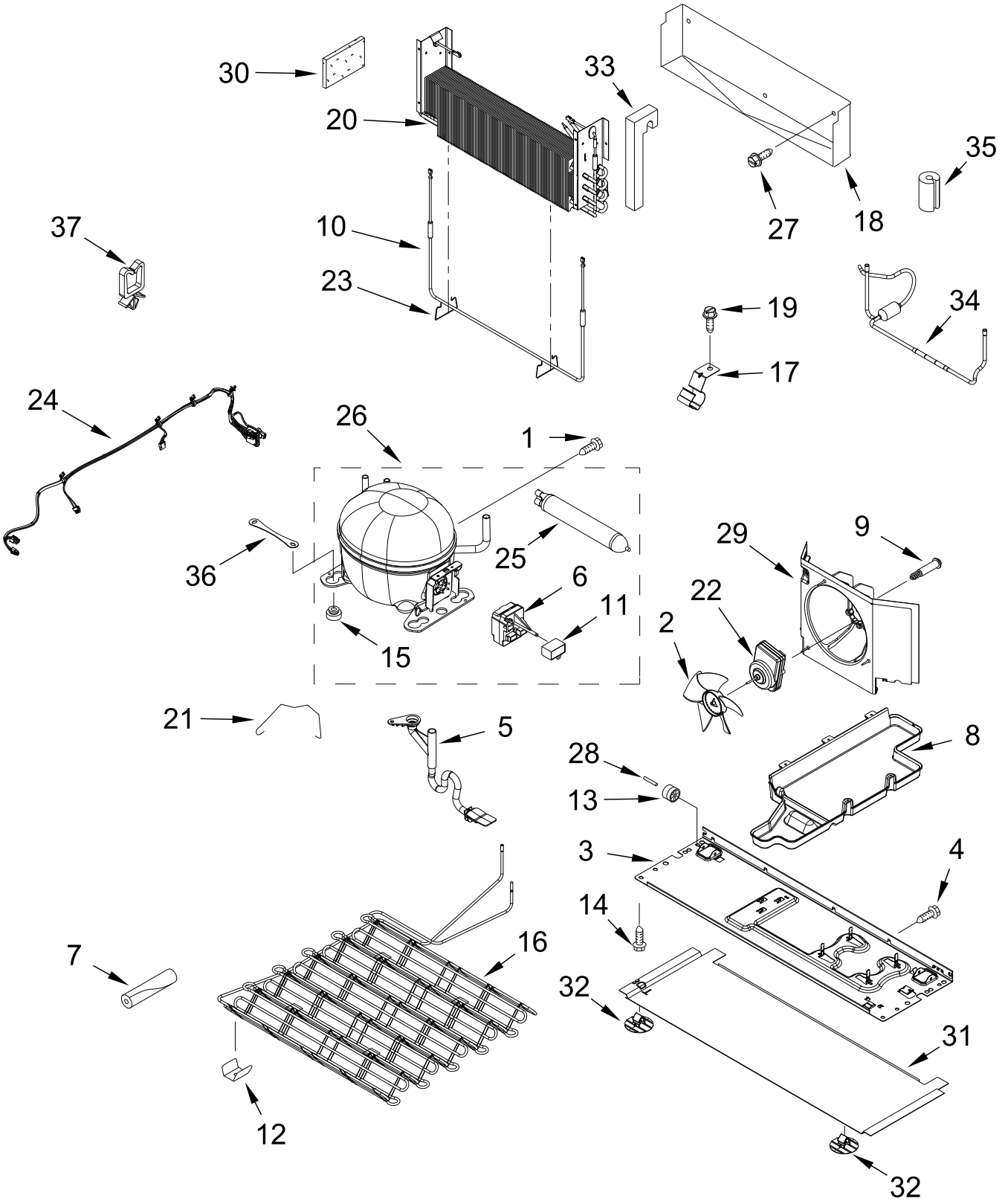
30
20
33
35
27
18
37
10
23
19
34
17
24
26
1
36
25
6
11
15
29
9
22
2
21
5
28
8
13
3
4
14
7
16
32
31
12
32

UNIT PARTS

Illus. No.	Part No.	Description
1	W10141625	Screw
2	2188935	Blade, Fan
3	W10570074	Baseplate
4	12990511	Screw
5	W10776917	Extension, Drain
6	W10796752	Device, Start
7	W10303521	Sleeve
8	W10660727	Tray, Evaporator
9	W10622701	Screw
10	12729128	Heater, Defrost
11	W10350564	Capacitor
12	W10248621	Clip, Condenser
13	12477102	Roller
14	12992101	Screw
15	10835903	Grommet
16	W10627646	Assembly, Condenser
17	W10281329	Clip, Drier
18	W10342573	Tray, Drip
19	W10141645	Screw
20	W10248589	Assembly, Evaporator
21	W10650382	Strap, Bale
22	W10909387	Motor, Condenser Fan
23	10428101	Clip, Heater
24	W11306948	Harness, Unit (Includes Power Cord)
25	W10177049	Drier
26	W10391109	Compressor (Also Order 876765 Tube Kit)
27	W10142294	Screw
28	12477202	Axle, Roller
29	W10406719	Shroud
30	2169104	Insulation, Sound Deadening
31	W10278140	Cover, Condenser (Bottom)
32	W10815861	Clip, Bottom Cover
33	W10491355	Gasket, Airdam
34	W10463542	Tube, Suction
35	W10413009	Grommet, Air Return
36	W10236396	Strap, Compressor
37	2223913	Clip
		FOLLOWING PARTS NOT ILLUSTRATED
	978025	Valve, Access (1/4")
	978026	Valve, Access (5/16")
	978029	Valve, Access (5/8")
	978030	Valve, Access (3/4")
	876764	Valve, Access (3/16")
		REFRIGERANT CHARGE
		5.50 oz. (R-134A)

SHELF PARTS

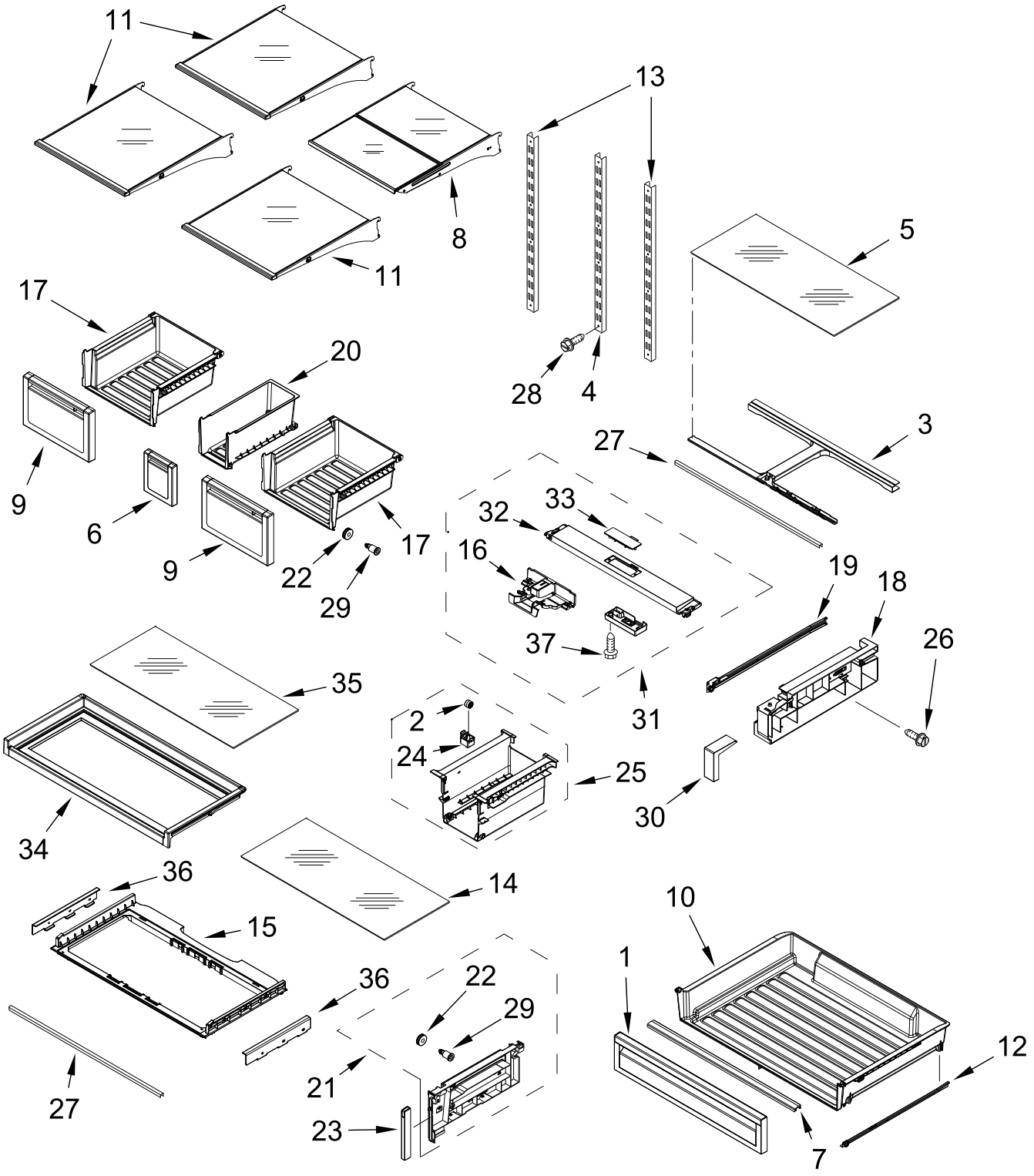
11
13
8
11
5
17
20
28
4
3
27
9
6
9
22
29
17
32
33
16
19
18
37
26
31
35
2
24
25
30
34
36
14
10
15
1
36
22
29
12
27
21
23
7

SHELF PARTS

Illus. No.	Part No.	Description
1	W10510417	Front, Pantry
2	W10248789	Roller, Center
3	W11124673	Support, Pantry
4	W10248516	Ladder, Center
5	W10893769	Glass, Pantry
6	W10423520	Assembly, Crisper Front
7	W10398002	Handle, Pantry
8	W10709175	Assembly, Tuck Shelf
9	W10688114	Assembly, Crisper Front
10	W10498901	Pan, Pantry
11	W10709163	Assembly, Shelf
12		Runner, Roller
	W10508330	Left Hand
	W10508328	Right Hand
13	W10372170	Ladder, Side
14	W10893768	Glass, Crisper
15	W11133636	Cover, Crisper
16	W10512596	Knob, Pantry Temperature Control
17	W10387757	Pan, Crisper
18		Sideplate, Pantry
	W10498906	Left Hand
	W11124810	Right Hand
19		Slide, Pantry
	W10508327	Left Hand
	W10508326	Right Hand
20	W10387778	Pan, Crisper
21		Sideplate, Crisper
	W11315531	Left Hand
	W11315533	Right Hand
22	W10248544	Roller, Guide
23	W10467415	Plate, Crisper Front
24	W10530314	Housing, Roller
25	W10662015	Assembly, Center Crisper Support
26	8281136	Screw
27	W10236512	Support, Front
28	W10423560	Screw
29	W10257246	Axle, Roller
30	W10467416	Plate, Pantry Front
31	W10554293	Assembly, Pantry Front Cover
32	W10554285	Cover, Pantry Top
33	W10554279	Housing, Pantry Temperature Control
34	W11235830	Assembly, Platter Shelf
35	W11133665	Glass, Platter
36		Rail, Side
	W11133647	Left Hand
	W11133648	Right Hand
37	12990204	Screw

DISPENSER FRONT PARTS

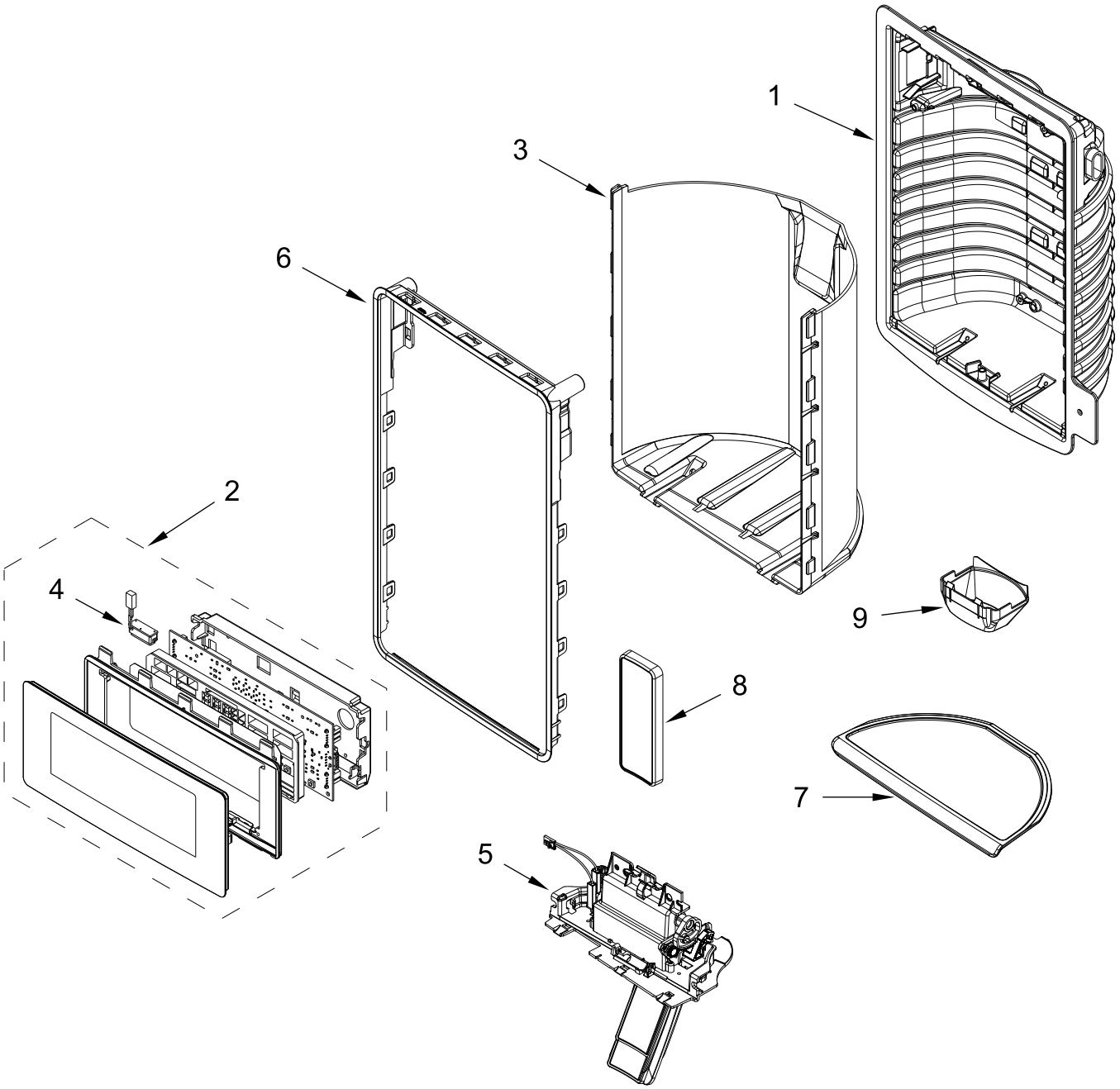

DISPENSER FRONT PARTS

Illus. No.	Part No.	Description
1		Housing, Dispenser (Not Serviced)
2		Assembly, User Interface (Includes Light Feature)
	W11114478	Silver
3		Wall, Dispenser False
	W10819058	Grey
4	W10470750	Assembly, LED
5	W10577864	Assembly, Seperator
6		Ring, Trim
	W10402180	Chrome
7		Tray, Drip
	W10819059	Grey
8		Assembly, Pad
	W10473007	Grey
9	W10435760	Guide, Ice

ICEMAKER AND ICE CONTAINER PARTS

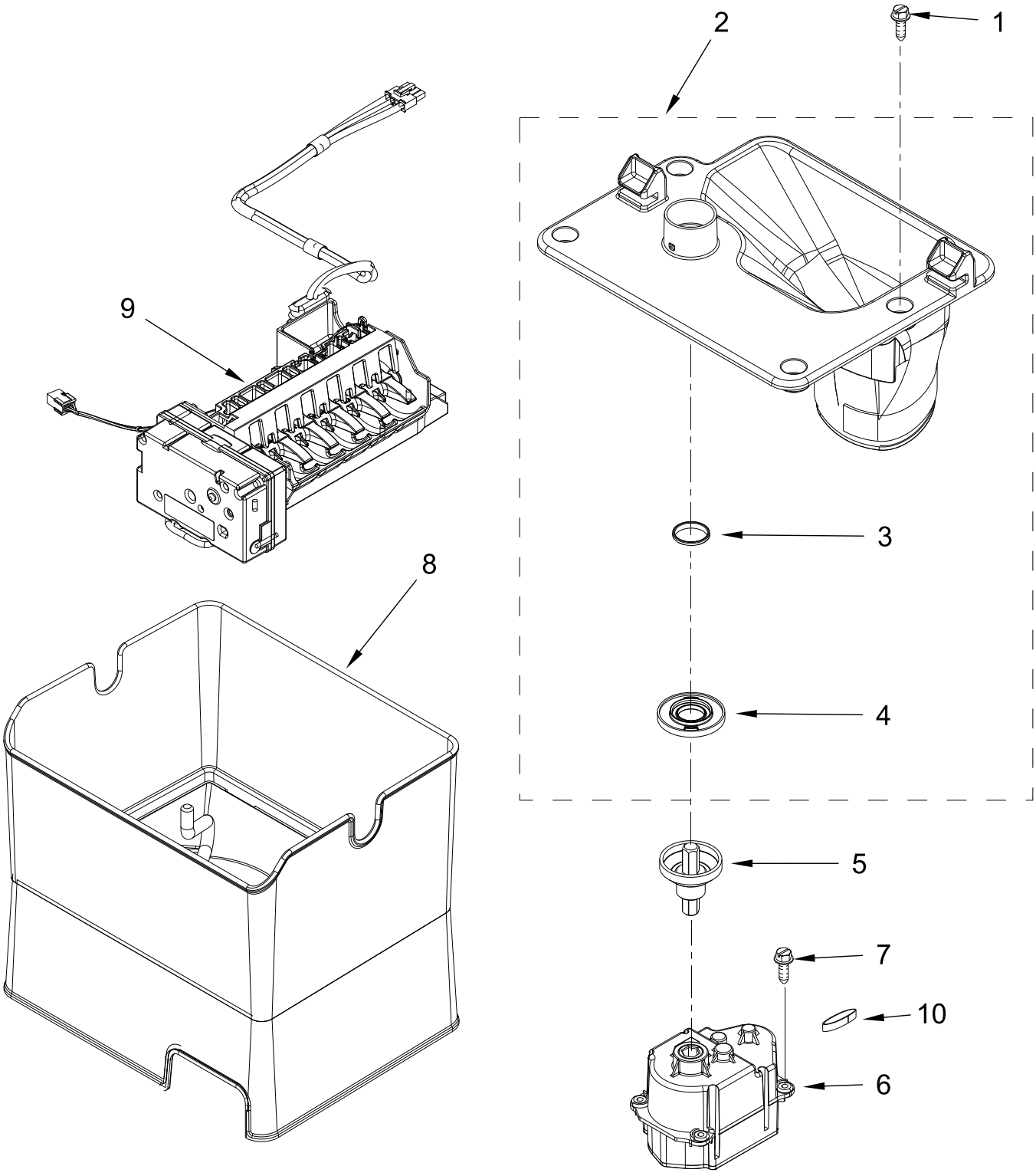

ICEMAKER AND ICE CONTAINER PARTS

Illus. No.	Part No.	Description
1	W10272364	Screw
2	W10347051	Plate, Ice Chute
3	2198628	Seal
4	W10347120	Clip, Retainer
5	W10347114	Shaft, Motor
6	W11185741	Motor, Dispenser
7	8281163	Screw (Stainless)
8	W10347093	Assembly, Ice Container
9	W11457039	Assembly, Icemaker
10	W10291905	Gasket

OPTIONAL PARTS

PAINT, TOUCH-UP (1/2OZ.)

Illus. No.	Part No.	Description
	72017	White
	72032	Black
	W10134625	Apollo Grey
	W10917540	Midnight Grey
	511873	White Porcelain (2 oz.)
	4392899	Biscuit/Bisque

PAINT, PRESSURIZED SPRAY (12 OZ.)

Illus. No.	Part No.	Description
	350930	White
	350939	Enamel, Black
	285006	Black
	350942	White Primer
	4392901	Biscuit/Bisque

PAINT, BULK (1 QT.)

Illus. No.	Part No.	Description
	799344	White (Uncut)

MISCELLANEOUS

Illus. No.	Part No.	Description
	212643	Sealer, Gum (4 Feet)
	479502	Tape, Vinyl (3/4 x 108")
	876370	Insulation (2 Pieces, 3" x 24" x 48")
	876305	Insulation Kit (14 Pieces, 3" x 24" x 48")
	978941	Insulation, Fiberglass (63 1/2" x 35 1/2" x 2 5/8")
	876029	Kit, Foam Slab (30" x 32 1/2" x 1 1/2")
	505587	Sealer, Mastic (1 Qt)
	503695	Cork, Sealer
	20000008	Cleaner, Stainless Steel
	542638	Grease, Silicone (1/2 Oz.)
	542639	Cement, Alumilastic (1 1/4 Oz.)
	833938	Kit, Terminal Connector
	8003RP	Kit, Water Inlet

TORX SCREW WRENCH

Illus. No.	Part No.	Description
	1117510	Torx Key