AUTOMATIC WASHER

MODELS:

WTW5105HW0 (White)
WTW5105HC0 (Chrome Shadow)

04/22/2020
© 2020 Whirlpool Corporation
Part No. W11428130 Rev. B

TOP AND CABINET PARTS

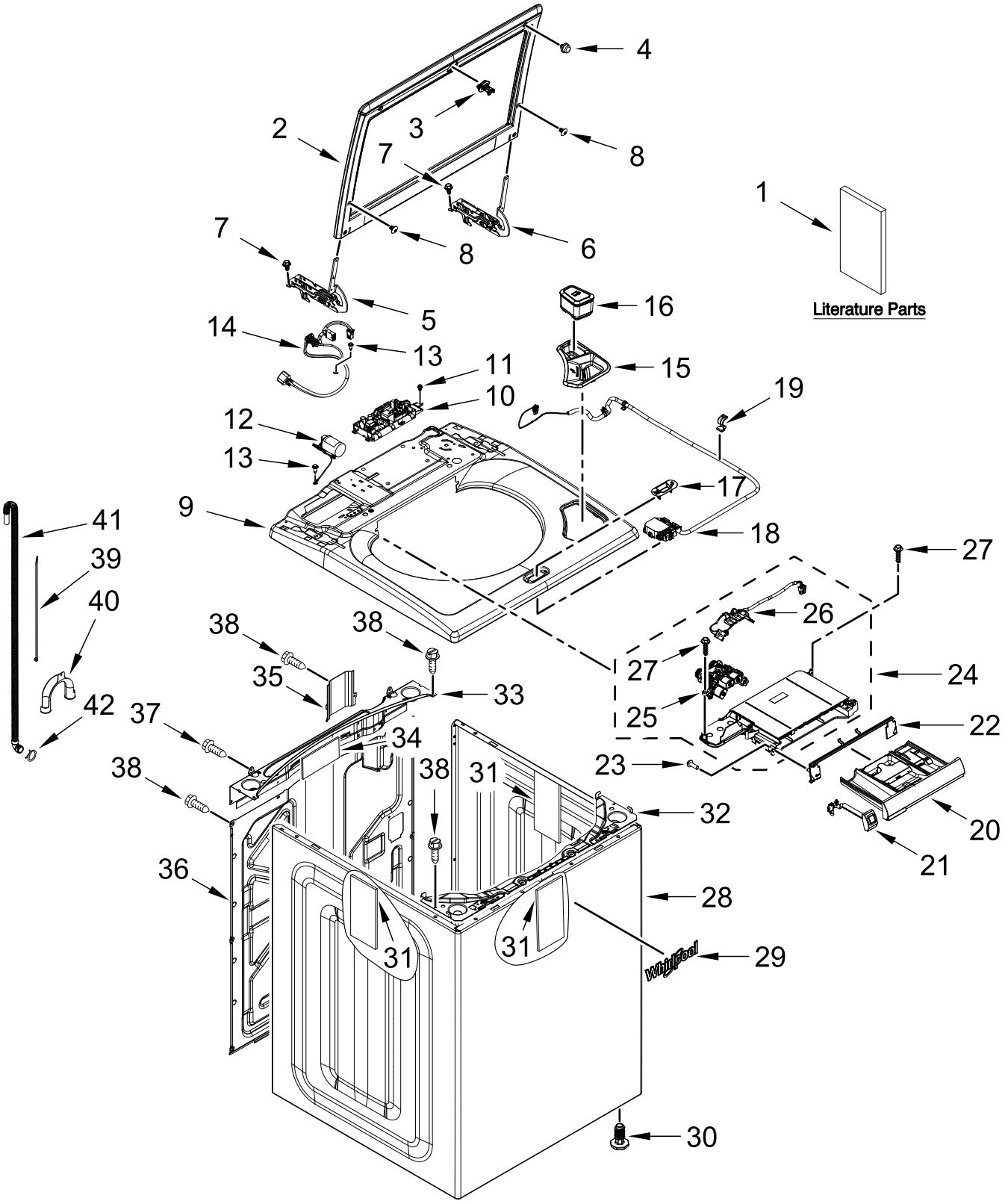

TOP AND CABINET PARTS

Illus. No.	Part No.	Description
1		Literature Parts
	W11197727	Owners Manual
	W11197737	Quick Reference Guide
	W11197740	Energy Guide
	W11197708	Tech Sheet
	W11250101	Wiring Diagram
2		Assembly, Lid (Glass)
	W11113665	Tempest Grey
3	W11091027	Strike Assembly
4	W10631074	Bumper, Lid
5	W11128305	Hinge, Lid (Left)
6	W11128306	Hinge, Lid (Right)
7	W10142728	Screw
8	W11183686	Screw
9		Top
	W11126901	White
	W11126902	Chrome Shadow
10	W11387685	Control Unit Assembly, Machine and Motor
11	693995	Screw
12	W11033573	Assembly, Line Filter
13	3400076	Screw
14	W11112935	Power Cord
15		Bezel, Bleach Dispenser
	W11175768	Chrome Shadow
16	W11175764	Brush, Scrub
17		Bezel, Lid Lock
	W11215078	White
	W11215091	Chrome Shadow
18	W11032875	Assembly, Lid Lock
19	90016	Clip, Harness
20		Assembly, Dispenser Drawer
	W11239953	Chrome Shadow
21		Assembly, Faucet Switch
	W11246872	Chrome Shadow
22		Assembly, Dispenser Bezel
	W11375989	Chrome Shadow
23	3400061	Screw
24	W11198958	Assembly, Dispenser Housing & Inlet Valve
25	W11096267	Valve, Water Inlet
26	W11130935	Harness, Valve
27	97787	Screw
28		Cabinet
	W10676680	White
	W10676681	Chrome Shadow
29	W10884775	Badge, Whirlpool
30	W11179235	Foot Assembly, Leveling
31	W10688364	Absorber, Impact
32		Channel, Top Front
	W11172902	White
	W10724132	Chrome Shadow
33	W10512626	Channel, Top Rear
34	8564458	Absorber, Impact
35	W10676061	Cover, Harness
36	W10612644	Panel, Rear
37	W10567155	Screw
38	W10660565	Screw
39	W10339879	Tie, Cable
40	W10280024	U-Bend, Drain Hose
41	W11203364	Hose, Outer Drain Assembly
42	356138	Clamp, Hose

CONSOLE PARTS

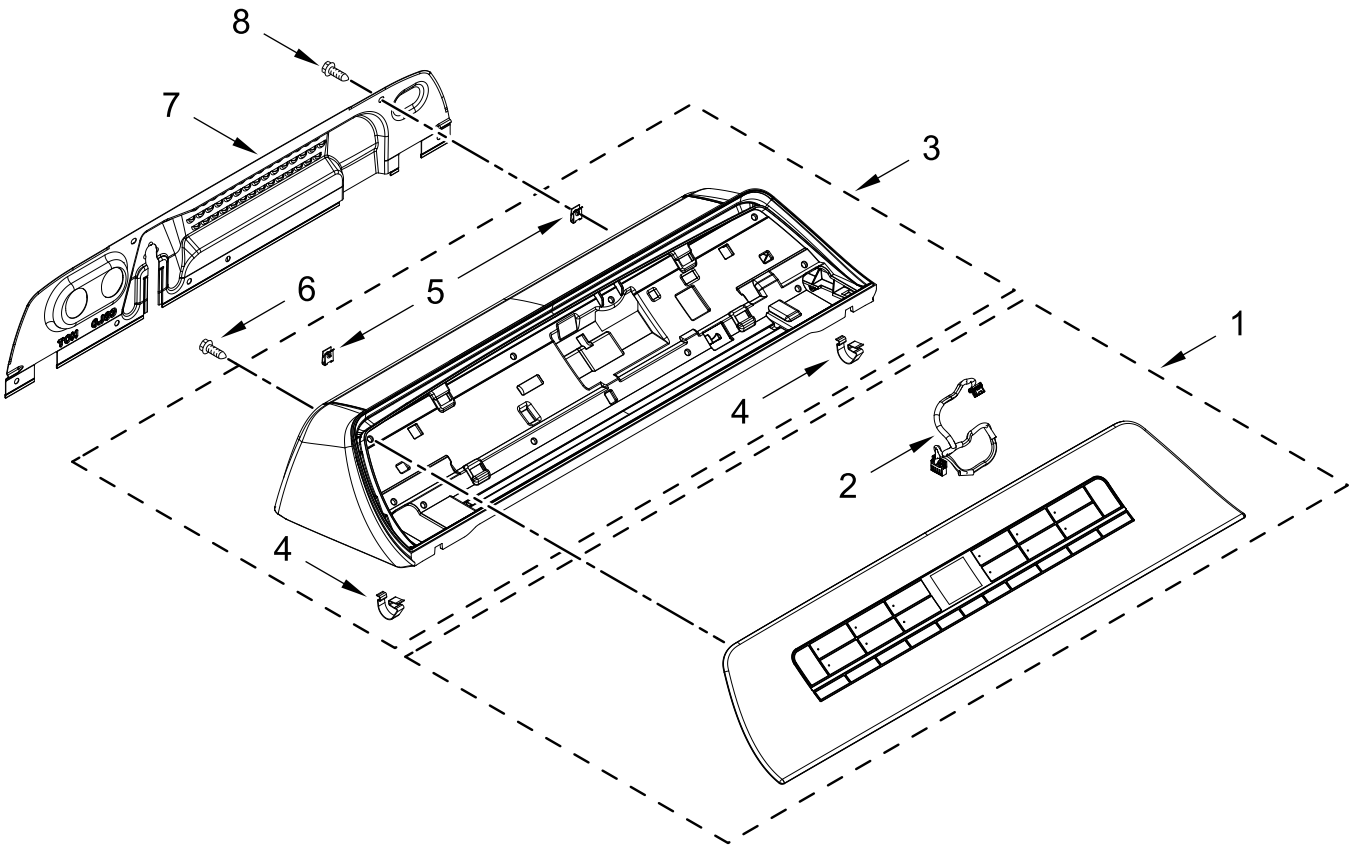

CONSOLE PARTS

Illus. No.	Part No.	Description
1	W11112918	Assembly, Fascia
2	W11130939	Harness, UI
3		Assembly, Console
	W11093764	White
	W11178258	Chrome Shadow
4	8312709	Clip, Console
5	W10298336	Nut, "U"
6	12990204	Screw
7	W11129559	Panel, Console Rear
8	W10660565	Screw

BASKET AND TUB PARTS

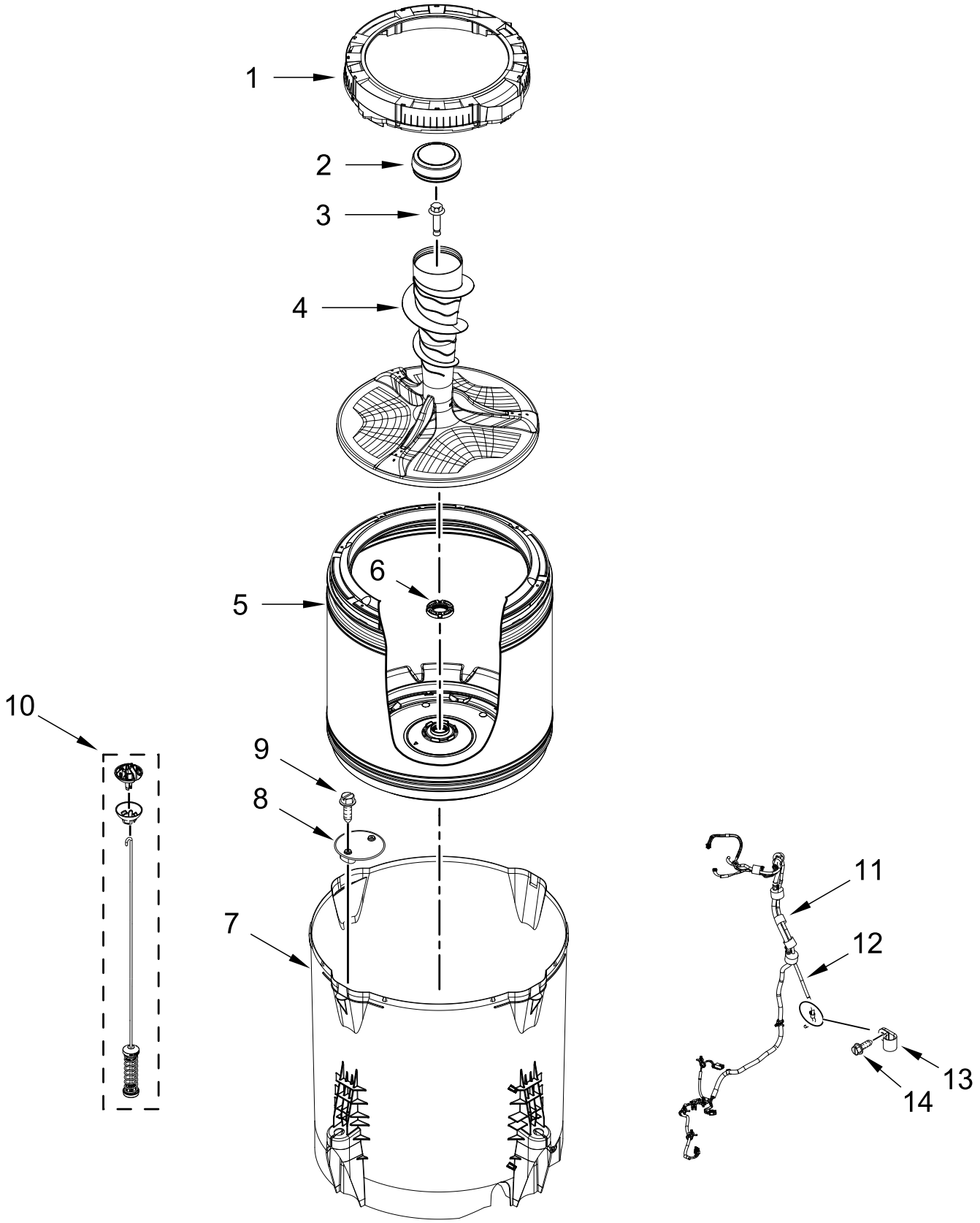

BASKET AND TUB PARTS

Illus. No.	Part No.	Description
1	W11094300	Tub Ring
2	W11269211	Cap, Agitator
3	W10625252	Screw
4	W10821990	Agitator (Complete)
5	W11178224	Basket Assembly
6	W11183985	Basket, Lock Nut
7	W11219115	Tub
8	W11089264	Filter, Drain Pump
9	8533928	Screw
10	W11171694	Damper Assembly, Tub Suspension (Set Of 4-Includes Suspension Bushings and Suspension Balls)
11	W11130932	Harness, Lower
12	W10590949	Hose, Pressure Switch
13	W10005430	Clamp, Cable
14	W10238319	Screw

GEARCASE, MOTOR AND PUMP PARTS

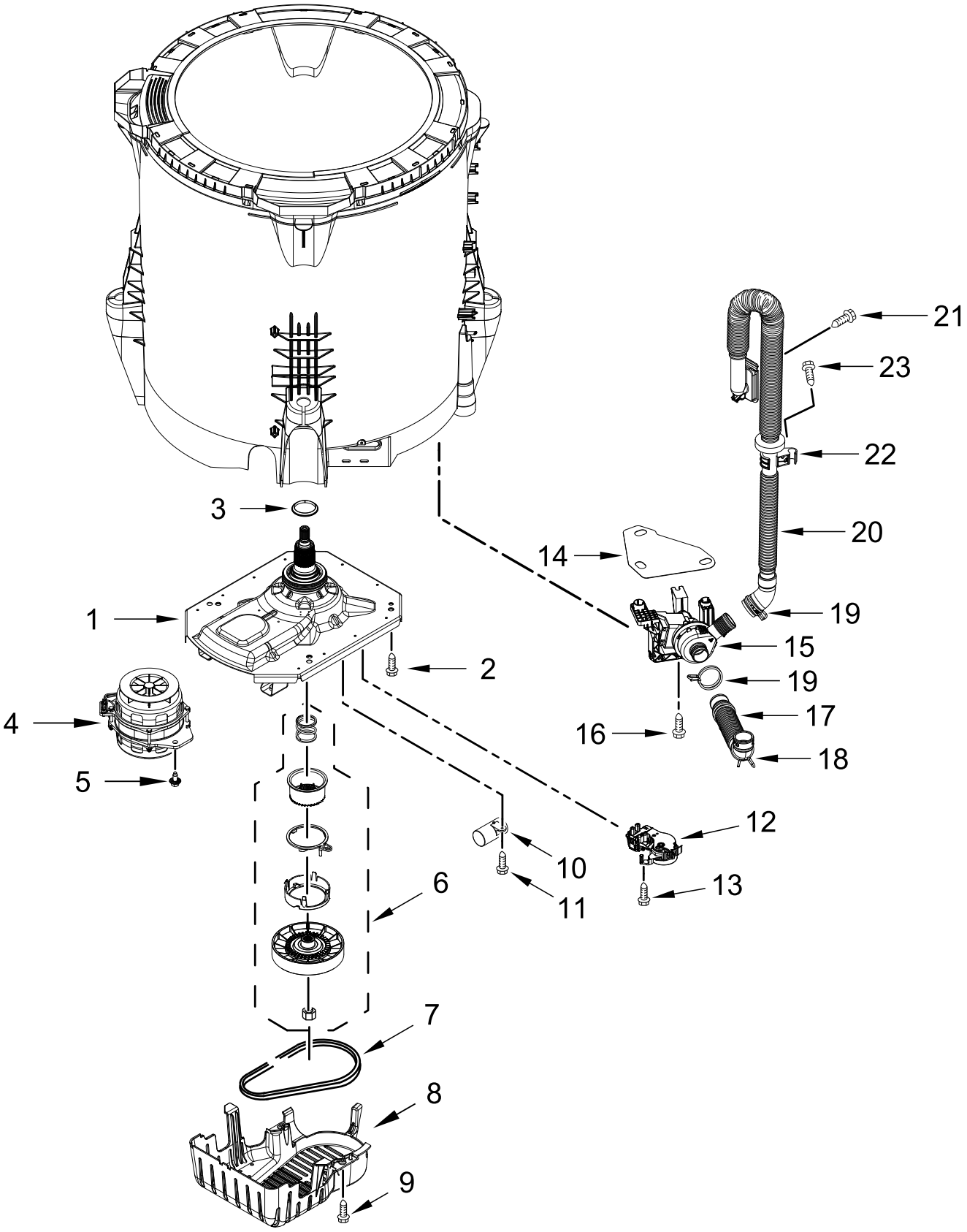

GEARCASE, MOTOR AND PUMP PARTS

Illus. No.	Part No.	Description
1	W11164183	Gearcase Assembly
2	W10249633	Screw
3	W11218170	Washer, Thrust
4	W10677723	Motor, Drive
5	W10094780	Screw
6	W10721967	Splutch Kit (60Hz)
7	W10808317	Belt, Drive
8	W11087188	Shield, Pulley Cover
9	357640	Screw
10	W11162560	Capacitor, Motor Run
11	W10142728	Screw
12	W10815026	Actuator- Shift
13	9741052	Screw
14	W10894129	Shield, Heat
15	W11263349	Pump Assembly, Drain
16	W10004910	Screw
17	W10763259	Hose, Tub to Pump
18	8317496	Clamp, Hose
19	W11375994	Clamp, Hose
20	W11291620	Hose, Internal Drain
21	9740848	Screw
22	W10652932	Clip, Hose
23	8533943	Screw

OPTIONAL PARTS (NOT INCLUDED)

PAINT, TOUCH-UP (1/2OZ.)

Illus. No.	Part No.	Description
	72017	White
	W10446202	Chrome Shadow

PAINT, PRESSURIZED SPRAY (12 OZ.)

Illus. No.	Part No.	Description
	350938	Gray Primer
	350930	White

PAINT, BULK (1 QT.)

Illus. No.	Part No.	Description
	799344	White (Uncut)

SEALER

Illus. No.	Part No.	Description
	285195	Sealer, Gasket (.20 Fl. Oz.) (6ml)

ACCESSORY PARTS

Illus. No.	Part No.	Description
	XHS1000XX	Laundry Appliance Hanger Rack
	W10135699	Affresh® Washer Cleaner
	W10355053	Affresh® Machine Cleaning Wipes
	W10921681	Affresh® Machine Cleaning Wipes
	W10921682	Affresh® Washer Cleaner Pouch
	8212526	Washer, Drip Tray
	W10180464RP	Delicates Laundry Wash Bag
	W10214580RP	Top Load Washer/Dryer Cover (Gray)
	8212546RP	Inlet Hoses, 4 Ft. (Two Black Hoses W/ Straight Ends and 4 Rubber Washers)
	8212487RC	Inlet Hoses, 5 Ft. (Two Braided Hoses W/Straight Ends & 4 Rubber Washers).
	8212487RP	Inlet Hoses, 5 Ft. (Two Braided Hoses W/Straight Ends & 4 Rubber Washers).
	8212545RP	Inlet Hoses, 5 Ft. (One Red Hose and One Blue Hose W/ Straight Ends and 4 Rubber Washers)
	8212641RP	Inlet Hoses, 5 Ft. (Two Black Hoses W/ Straight Ends and 4 Rubber Washers)
	8212638RC	Inlet Hoses, 6 Ft (Two Braided Hoses W/ One Straight End and One 90 Degree End and 4 Rubber Washers).
	8212638RP	Inlet Hoses, 6 Ft (Two Braided Hoses W/ One Straight End and One 90 Degree End and 4 Rubber Washers)
	8212656RP	Inlet Hoses, 10 Ft. (Two Black Hoses W/ Straight Ends and 4 Rubber Washers)
	W10575888	Hose Fill Kit
	285320	Siphon Break Kit
	DRNEXT4	Drain Hose Extension Kit
	40922	Drain Hose Extension Kit
	285863	4' Drain Hose w/Clamp
	8318155	4' Drain Hose Extension
	285666	8' Drain Hose w/clamp