BOTTOM MOUNT FRENCH DOOR REFRIGERATOR
Fingerprint Resistant

MODELS:

WRF535SWHZ02 (Stainless Steel)
WRF535SWHV02 (Black Stainless)

11/08/2019
© 2019 Whirlpool Corporation
Part No. W11341240 Rev. B

CABINET PARTS

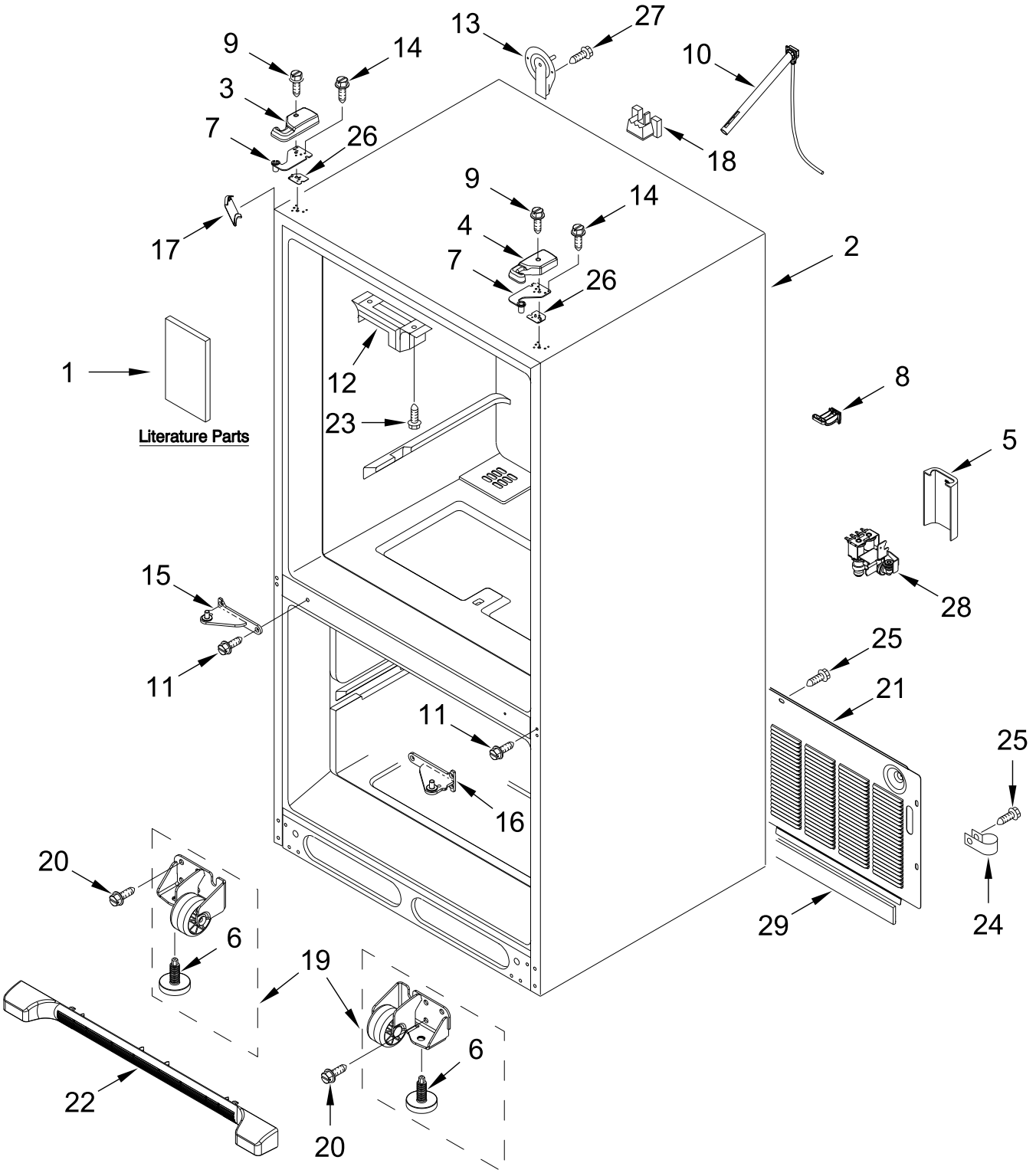

CABINET PARTS

Illus. No.	Part No.	Description
1		Literature Parts
	W11296635	Use and Care Guide
	W11308945	Energy Guide
	W10517966	Tech Sheet
2		Cabinet (Not a Servicable Part)
3		Cover, Top Hinge Left Hand
	12962301AP	Grey
	12962301B	Black
4		Cover, Top Hinge Right Hand
	12962302AP	Grey
	12962302B	Black
5	W10208593	Guard, Dual Water Valve
6	W10141622	Brake, Roller
7		Hinge, Top
	12963204ED	Left Hand
	12963205ED	Right Hand
8	W10528513	Sweep, Dual Tube
9	12992602	Screw
10	W11046934	Assembly, Fill Tube (Includes Tubing, Fill Tube Elbow, Tube Insert and Clamp)
11	W10673840	Screw (Stainless)
12	12698403	Plate, Pivot
13	12726003	Cover, Water Line
14	12992403	Screw
15		Hinge, Center Left Hand
	W10740150	Grey
	W10740149	Black
16		Hinge, Center Right Hand
	W10740146	Grey
	W10740145	Black
17		Cover, Corner
	12587703AP	Grey
	12587703B	Black
18	W10658542	Block, Fill Tube
19		Assembly, Roller
	W10515763	Left Hand
	W10515762	Right Hand
20	W10709365	Screw
21	W10211855	Cover, Unit
22		Grille, Toe
	W10534155	Grey
	W10534153	Black
23	688983	Screw
24	M0108107	Clamp, Tube
25	12990511	Screw
26		Shim, Top Hinge
	12999501	Left Hand
	12999502	Right Hand
27	12990504	Screw
28	W10420083	Valve, Water Inlet
29	B5759655	Gasket

REFRIGERATOR LINER PARTS

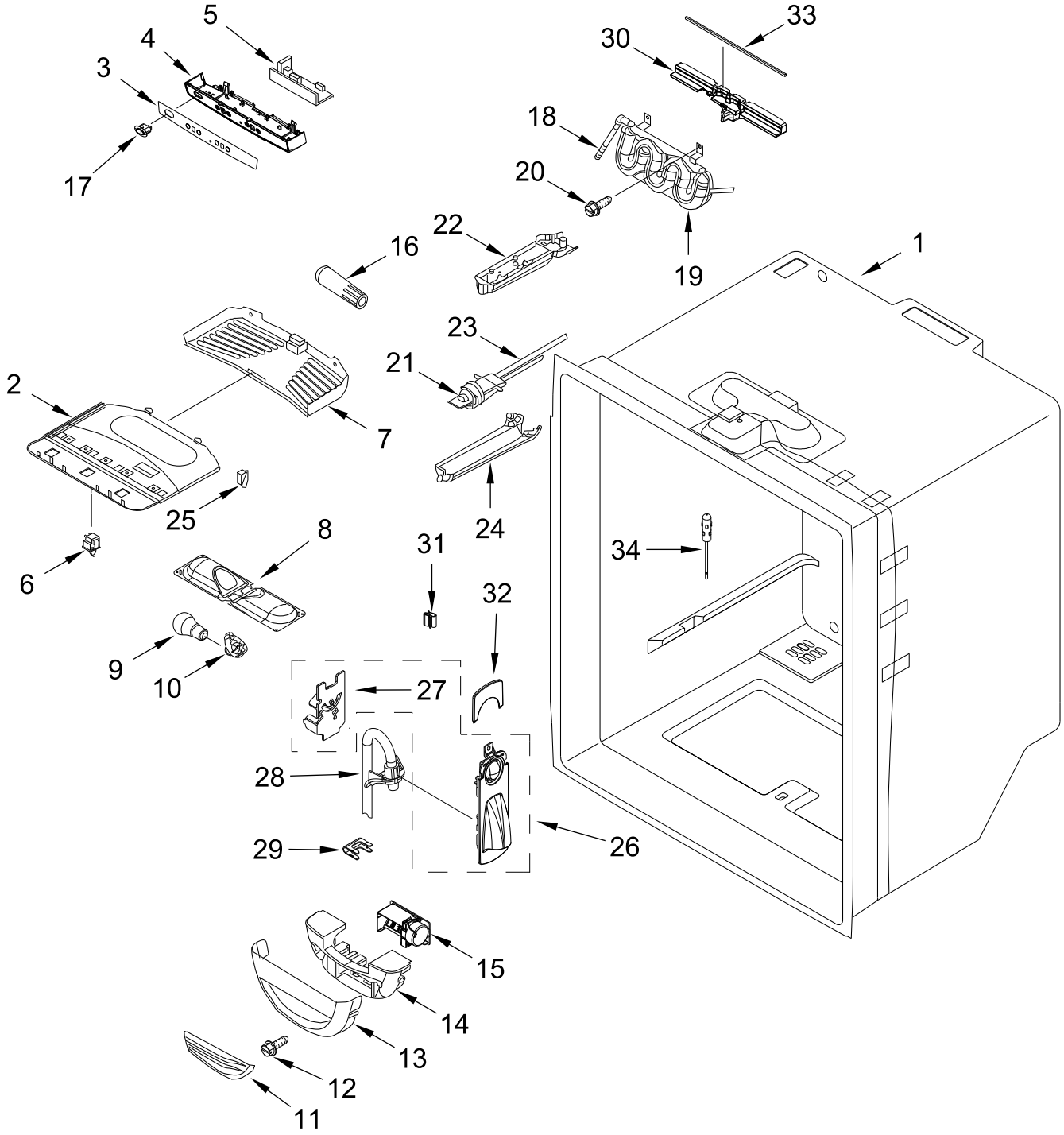

REFRIGERATOR LINER PARTS

Illus. No.	Part No.	Description
1		Liner (Not A Serviceable Part)
2	W10464764	Module, Light
3	W10613576	Overlay, Control
4	W10464775	Module, Control
5	W10503278	Control, Electronic
6	W10847853	Switch, Light
7	W11132917	Cover, Light
8	W10443023	Housing, Light
9	W11038115	Lamp, LED
10	12570701V	Socket, Light
11	12806801	Insert, Damper Cover
12	12990604	Screw
13	12806701	Cover, Damper
14	13012402	Insulation, Damper
15	W10594330	Damper, Control
16	W11256384	Filter, Water
17	12861601	Switch, Energy Saver
18	61006182	Union, Water
19	W11097710	Tank, Water
20	12990513	Screw
21	12664501SP	Cartridge, Bypass
22	12704801	Plate, Filter
23	W11308018	Head, Water Filter (Includes Bypass Cartridge)
24	12568001	Cover, Filter
25	12575501	Switch, Limit
26	W10585703	Facade, Dispenser
27	W10585699	Plate, Dispenser
28	W11031909	Guide, Waterline
29	12251001	Clip, Water Tube
30	W10117358	Insulation, Water Tank
31	B8390302	Clip, Facade
32	12707005	Facade, Dispenser (Top)
33	10685510	Gasket, Seal
34	12791403	Thermistor
		FOLLOWING PARTS NOT ILLUSTRATED
	W10389967	Harness, Controls (Refrigerator, Includes Thermistor)

FREEZER LINER AND ICEMAKER PARTS

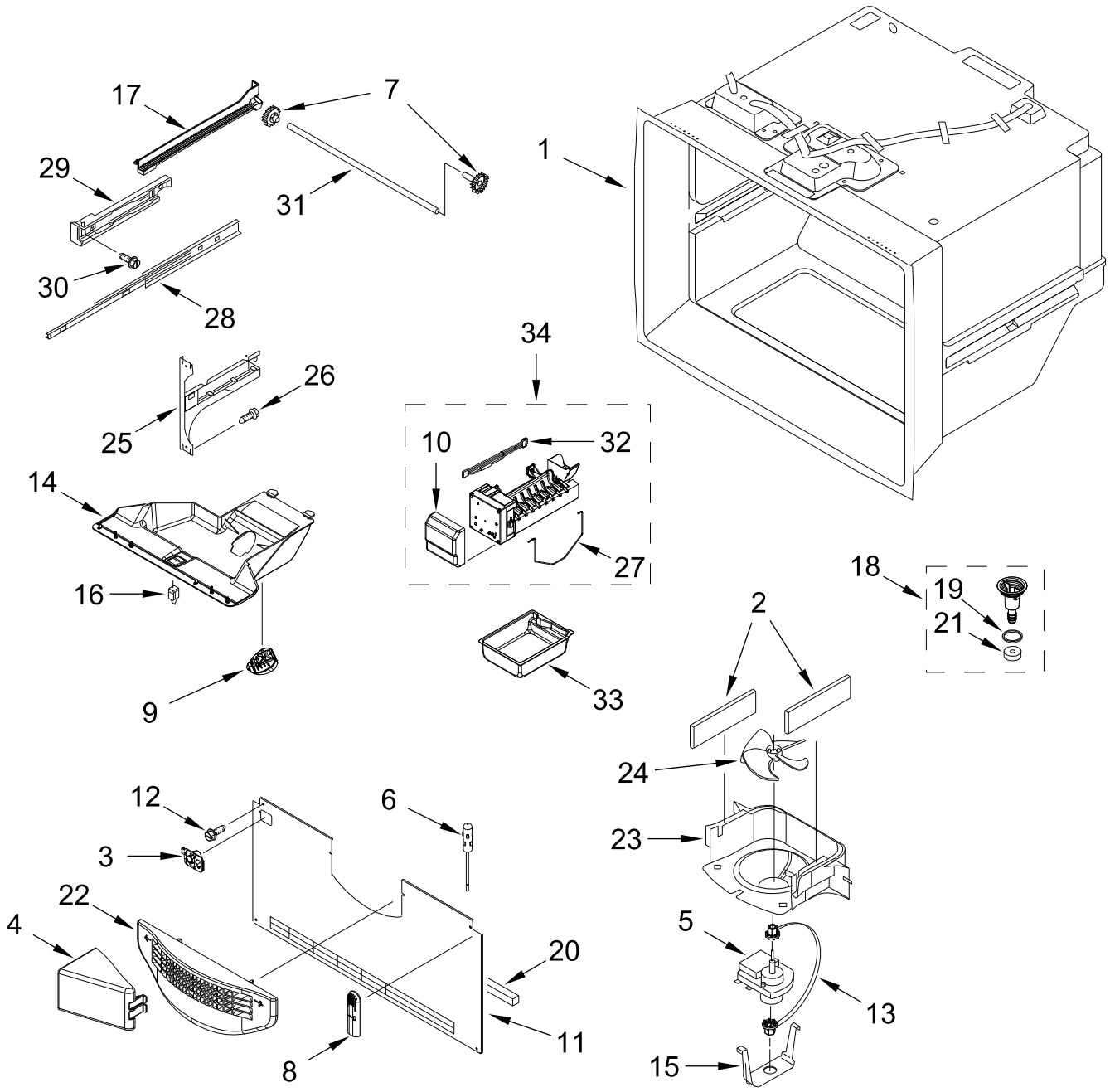

FREEZER LINER AND ICEMAKER PARTS

Illus. No.	Part No.	Description
1		Liner (Not A Seviceable Part)
2	A3189392	Gasket, Foam
3	W11261524	Guide, Fill Tube
4	W10157765	Diverter, Air
5	W10128551	Motor, Evaporator
6	12791417SP	Thermistor
7	12002497	Gear
8	12815301	Cover, Thermistor
9	W11251749	Light Module, LED
10	W10289690	Cover, Icemaker
11	W10308416	Cover, Evaporator
12	12990511	Screw
13	W10121318	Grommet
14	W10277025	Module, Light
15	13058002	Clip, Evaporator Motor
16	W10847849	Switch, Light
17		Rail, Side
	W10516603	Left Hand
	W10516602	Right Hand
18	W10662407	Assembly, Drain Funnel
19	M0500703	Seal
20	A3189396	Gasket
21	B8381501	Gasket, Drain
22	13024803	Grille, Freezer Air
23	13057901	Shroud, Evaporator Fan
24	2169142	Blade, Fan
25		Bracket, Door
	W10330991	Left Hand
	W10330993	Right Hand
26	12990521	Screw
27	W11260635	Arm, Shut Off
28	W10860513	Slide, Door
29		Adapter, Slide
	W10284684	Left Hand
	W10284685	Right Hand
30	12990501	Screw
31	W10802332	Shaft, Rack
32	W10793621	Harness, Icemaker Wire
33	W10171529N	Pan, Ice
34	W10793298	Assembly, Icemaker (Complete)

REFRIGERATOR DOOR PARTS

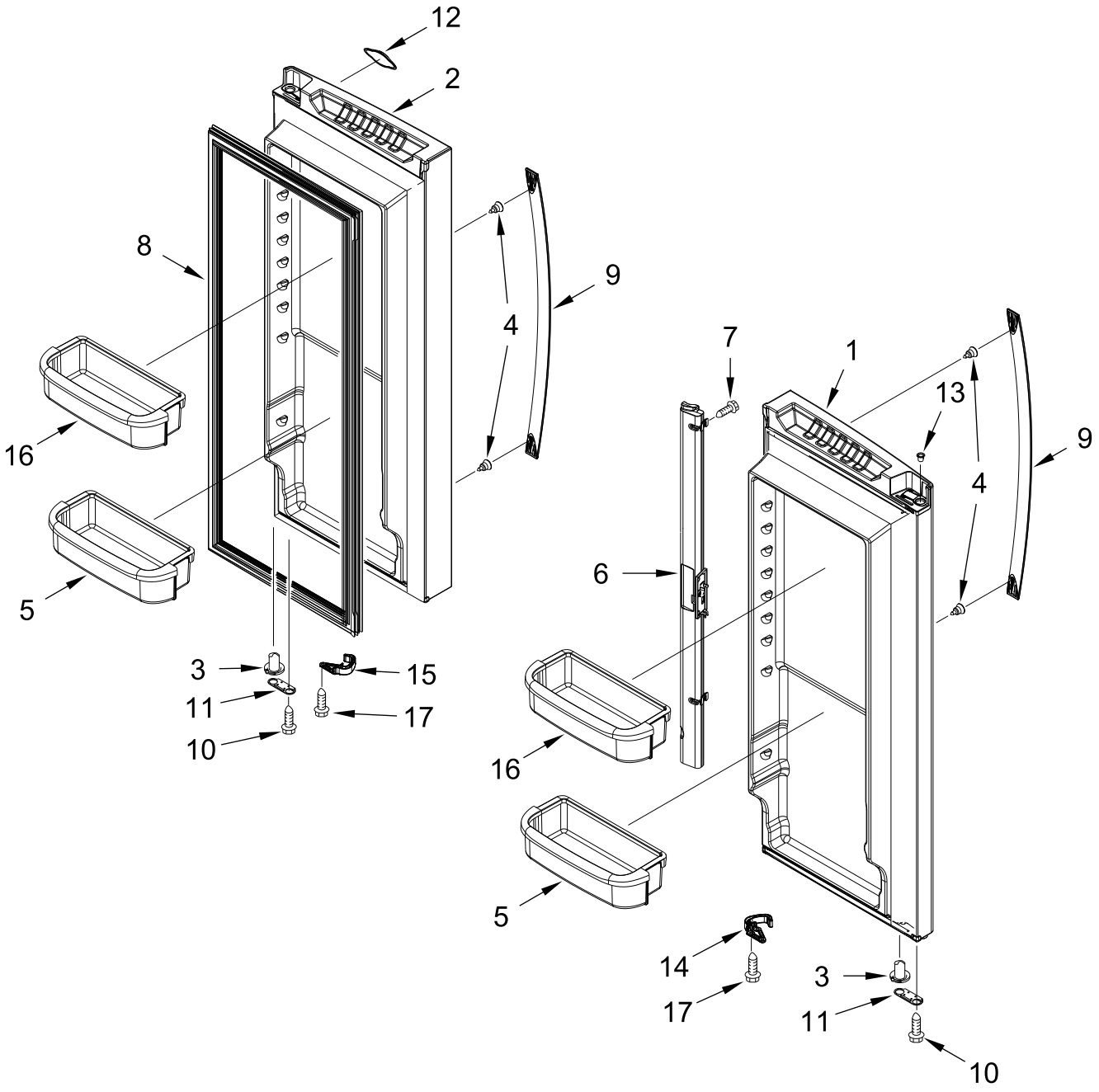

REFRIGERATOR DOOR PARTS

Illus. No.	Part No.	Description
1		Door, Refrigerator
		Left Hand
	W11254613	Stainless
	W10879200	Black Stainless
2		Door, Refrigerator
		Right Hand
	W11254623	Stainless
	W10879190	Black Stainless
3		Closure, Door
	12028505AP	Grey
	12028505B	Black
4	W11328753	Screw
5	W10371194	Bucket, Medium
6		Mullion, Door
	12722803APN	Grey
	12722803BN	Black
7	12990204	Screw
8		Gasket, Door
	W10830162	Grey
	W10830206	Black
9		Handle, Door
	W11045530	Stainless
	W11101972	Black Stainless
10	12990504	Screw
11		Stop, Door
	12968202AP	Grey
	12968202B	Black
12	W10884773	Badge
13	12996601	Clip, Bushing
14		Latch, Door Closer
		Left Hand
	W10833741	Grey
	W10725268	Black
15		Latch, Door Closer
		Right Hand
	W10833739	Grey
	W10725267	Black
16	W10289497	Bucket, Gallon
17	12990519	Screw

FREEZER DOOR PARTS

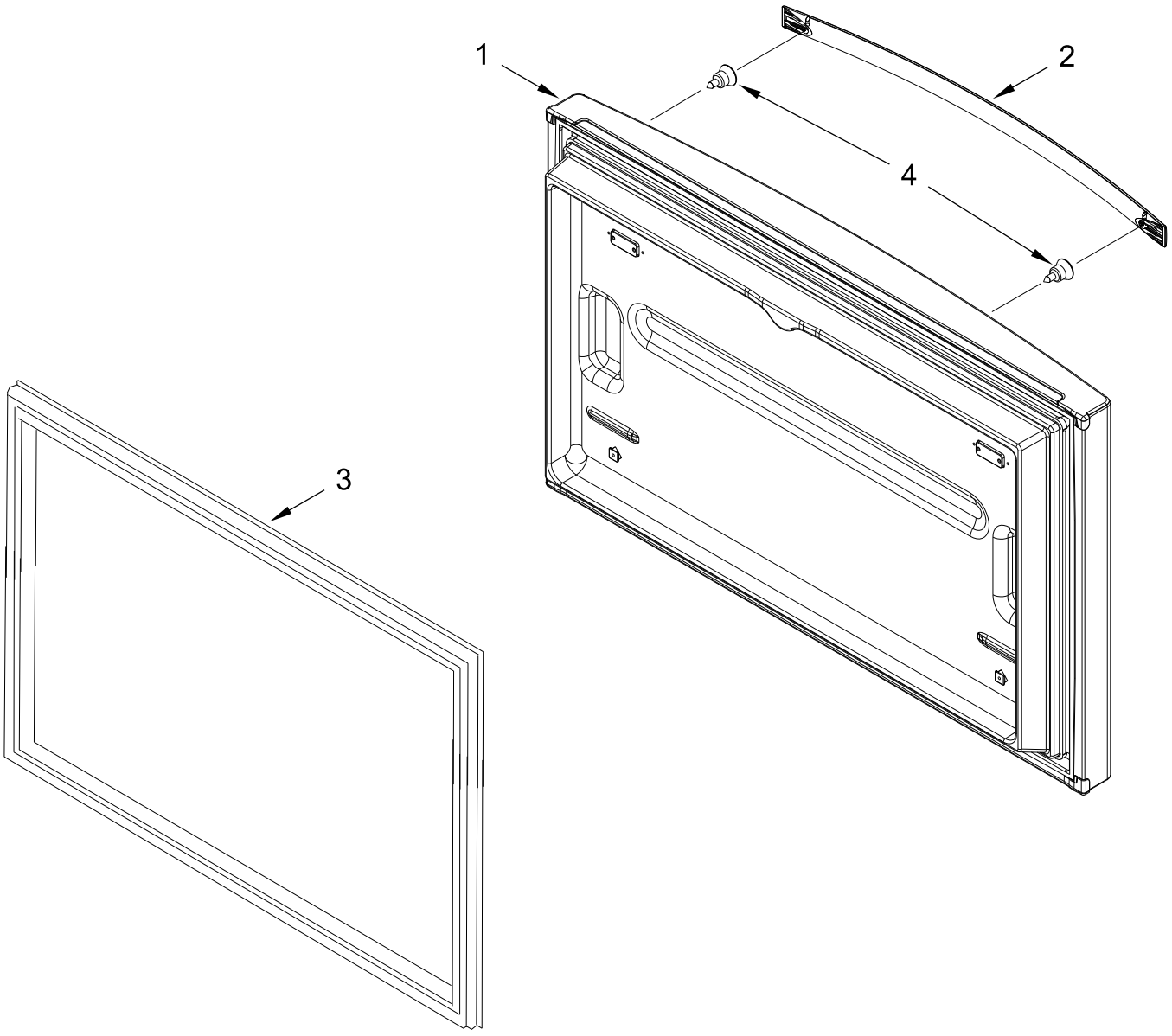

FREEZER DOOR PARTS

Illus. No.	Part No.	Description
1		Door, Freezer
	W11254609	Stainless
	W10879185	Black Stainless
2		Handle, Door
	W11115761	Stainless
	W11101977	Black Stainless
3		Gasket, Door
	W10443320	Grey
	W10436252	Black
4	W11328753	Screw

UNIT PARTS

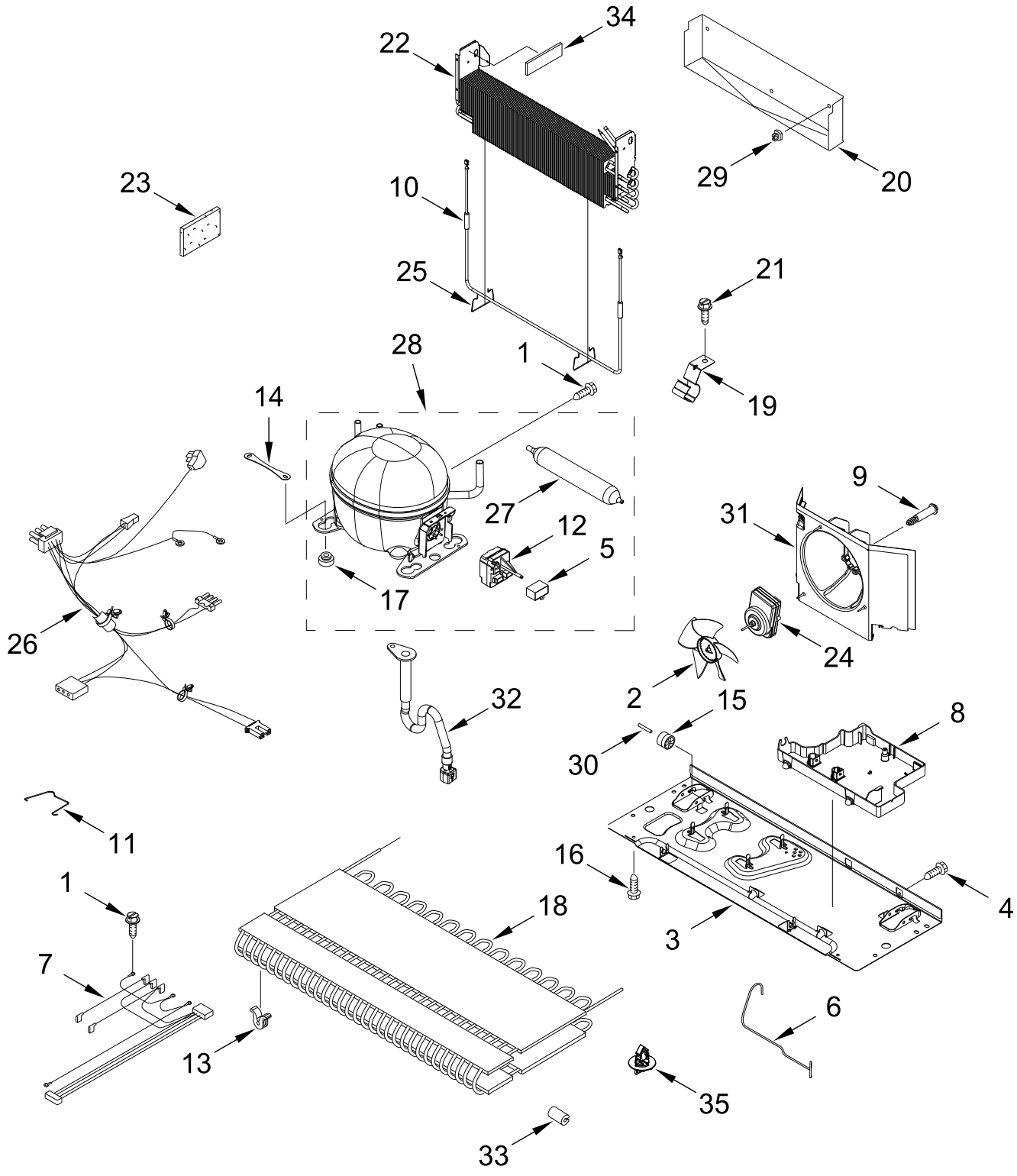
34
22
29
20
23
10
25
21
28
1
19
14
27
9
31
12
5
17
26
24
32
2
15
8
30
11
16
1
18
4
7
3
6
13
35
33

UNIT PARTS

Illus. No.	Part No.	Description
1	12992301	Screw
2	12825803	Blade, Fan
3	W10480111	Basepan
4	12990511	Screw
5	W10350564	Capacitor
6	W10233569	Tube, Discharge
7	W11050969	Harness, Evaporator (Includes Heater)
8	W10655368	Pan, Drain
9	W10622701	Screw
10	12729123	Heater, Defrost
11	W10216075	Strap, Bale
12	W10796752	Device, Start
13	W10137529	Grommet, Condenser
14	W10236396	Strap, Compressor
15	12477102	Roller
16	12992101	Screw
17	10835903	Grommet
18	W10346415	Condenser
19	W10281329	Clip, Drier
20	W10292803	Tray, Drip
21	12990701	Screw
22	W10669255	Evaporator
23	2169104	Insulation, Sound Deadening
24	W11373924	Motor, Condenser Fan
25	10428101	Clip, Heater
26	W11218259	Harness, Unit (Includes Power Cord)
27	W10177049	Drier
28	W10879296	Compressor
29	10623002	Clip, Evaporator
30	12477202	Axle, Roller
31	W10189184	Shroud, Condenser Fan
32	W10622099	Extension, Drain Tube
33	2319835	Grommet, Condenser
34	W11244122	Gasket, Foam
35	W10815863	Clip, Condenser
		FOLLOWING PARTS NOT ILLUSTRATED
	978025	Valve, Access (1/4")
	978026	Valve, Access (5/16")
	978027	Valve, Access (3/8")
	978029	Valve, Access (5/8")
	978030	Valve, Access (3/4")
	876764	Valve, Access (3/16")
		REFRIGERANT CHARGE
		5.00 oz. (R-134A)

SHELF PARTS

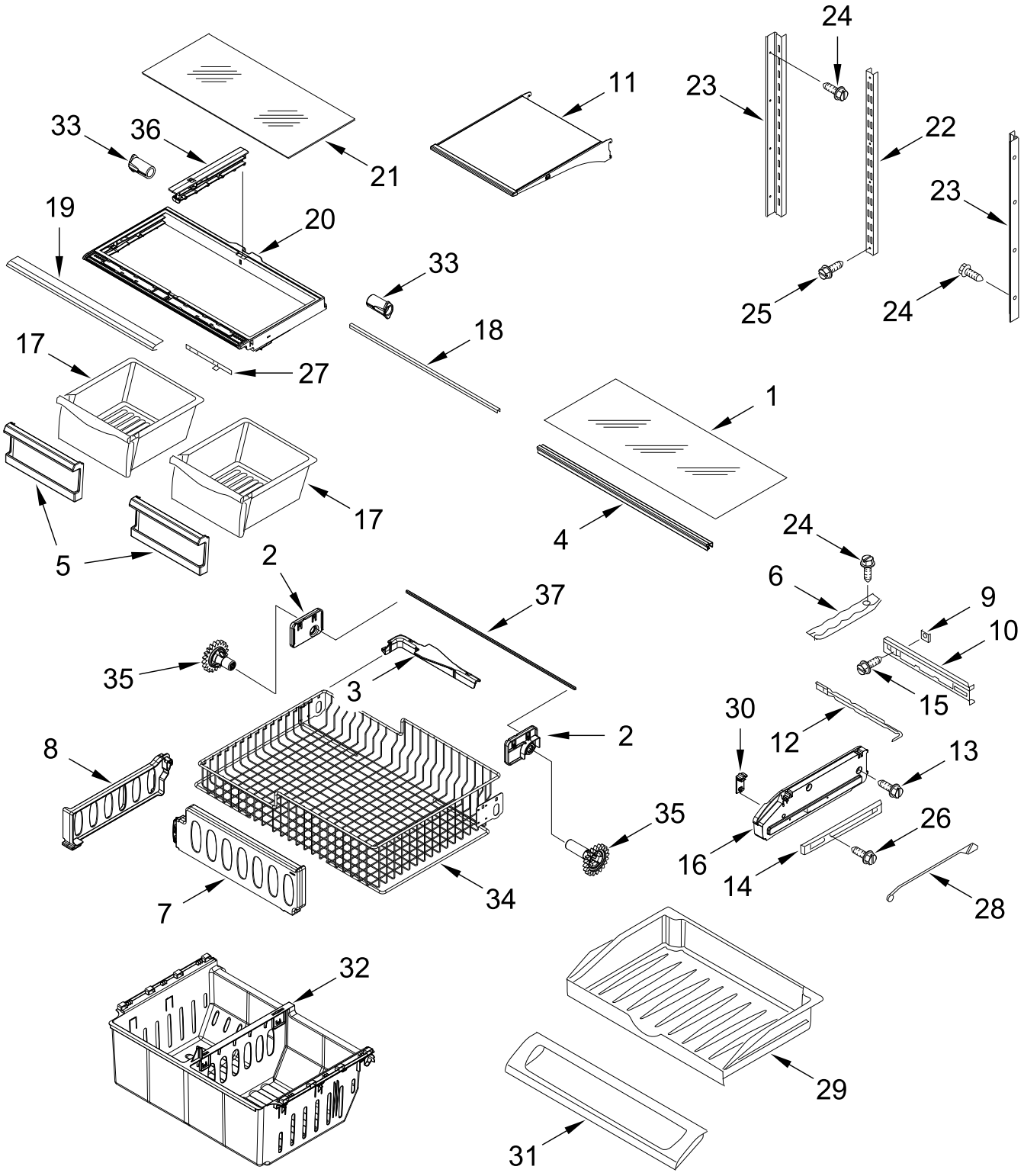
24
11
23
22
33
36
21
23
19
20
33
25
24
18
17
27
1
17
5
4
24
2
6
9
37
10
35
3
15
30
12
2
8
13
35
26
16
14
28
7
34
32
29
31

SHELF PARTS

Illus. No.	Part No.	Description
1	W10893772	Glass, Shelf
2		Mount, Gear
	W10348259	Left Hand
	W10348260	Right Hand
3	W10149389N	Lift, Bail Arm
4	W10528933	Support, Glass (Includes Pantry Brace)
5	12802602SP	Front, Crisper Pan
6	12531901	Track, Deli Drawer
7	W10171558	Divider, Basket (Upper)
8	W10241046	Divider, Basket (Upper)
9	12656901	Gasket, Pantry
10	12656202	Housing, Control
11	W11046990	Assembly, Shelf
12	12655402	Slide, Temperature Control
13	12990512	Screw
14	W10235370	Glide, Pantry
15	12990513	Screw
16		Endcap, Pantry
	W10845509	Left Hand
	W10845508	Right Hand
17	12804601SP	Pan, Crisper
18	12642303WD	Brace, Crisper Cover
19	W10231345N	Trim, Crisper
20	W10329866	Frame, Crisper
21	12204824N	Glass, Shelf
22	W10273463	Ladder, Center
23	W10569182	Ladder, Side
24	12990513	Screw
25	W10215666	Screw
26	12990504	Screw
27	12530805SP	Slide, Humidity Control
28	12655304	Bar, Control
29	12731302	Drawer, Pantry
30	12655204	Knob, Temperature Control
31	12656813	Lid, Pantry
32	W10293682	Bin, Lower
33	13062602	Support, Crisper Frame
34	W11115256	Basket, Freezer (Upper)
35		Gear, Spur
	W10474716	Left Hand
	W10474715	Right Hand
36	W10326469N	Rail, Center Crisper
37	W10802333	Shaft, Rack

OPTIONAL PARTS

PAINT, TOUCH-UP (1/2OZ.)

Illus. No.	Part No.	Description
	72017	White
	72032	Black
	W10134625	Apollo Grey
	W10917540	Midnight Grey
	511873	White Porcelain (2 oz.)
	4392899	Biscuit/Bisque

PAINT, PRESSURIZED SPRAY (12 OZ.)

Illus. No.	Part No.	Description
	350930	White
	350939	Enamel, Black
	285006	Black
	350942	White Primer
	4392901	Biscuit/Bisque

PAINT, BULK (1 QT.)

Illus. No.	Part No.	Description
	799344	White (Uncut)

MISCELLANEOUS

Illus. No.	Part No.	Description
	212643	Sealer, Gum (4 Feet)
	479502	Tape, Vinyl (3/4 x 108")
	876370	Insulation (2 Pieces, 3" x 24" x 48")
	876305	Insulation Kit (14 Pieces, 3" x 24" x 48")
	978941	Insulation, Fiberglass (63 1/2" x 35 1/2" x 2 5/8")
	876029	Kit, Foam Slab (30" x 32 1/2" x 1 1/2")
	505587	Sealer, Mastic (1 Qt)
	503695	Cork, Sealer
	20000008	Cleaner, Stainless Steel
	542638	Grease, Silicone (1/2 Oz.)
	542639	Cement, Alumilastic (1 1/4 Oz.)
	833938	Kit, Terminal Connector
	8003RP	Kit, Water Inlet

TORX SCREW WRENCH

Illus. No.	Part No.	Description
	1117510	Torx Key