ELECTRIC DRYER
INSTALLATION INSTRUCTIONS

Table of Contents

DRYER SAFETY 2
INSTALLATION REQUIREMENTS 3
Tools and Parts 3
LOCATION REQUIREMENTS 4
ELECTRICAL REQUIREMENTS 6
INSTALL LEVELING LEGS 7
ELECTRICAL INSTALLATION 7
Power Supply Cord Connection 8
Direct Wire Connection 10
VENTING 13
Venting Requirements 13
Plan Vent System 14
Install Vent System 15
CONNECT INLET HOSE (STEAM MODEL ONLY) 15
CONNECT VENT 17
LEVEL DRYER 17
COMPLETE INSTALLATION CHECKLIST 18
DOOR REVERSAL (OPTIONAL) 18

Para una version de estas instrucciones en español, visite www.Whirlpool.com

INSTALLATION NOTES

Date of purchase: _____

Date of installation: _____

Installer: _____

Model number: _____

Serial number: _____

W10868947A
W10868948A - SP

DRYER SAFETY

Your safety and the safety of others are very important.

We have provided many important safety messages in this manual and on your appliance. Always read and obey all safety messages.

This is the safety alert symbol.

This symbol alerts you to potential hazards that can kill or hurt you and others.

All safety messages will follow the safety alert symbol and either the word “DANGER” or “WARNING.” These words mean:

⚠ DANGER — **You can be killed or seriously injured if you don't immediately follow instructions.**

⚠ WARNING — **You can be killed or seriously injured if you don't follow instructions.**

All safety messages will tell you what the potential hazard is, tell you how to reduce the chance of injury, and tell you what can happen if the instructions are not followed.

WARNING - “Risk of Fire”

- **Clothes dryer installation must be performed by a qualified installer.**
- **Install the clothes dryer according to the manufacturer’s instructions and local codes.**
- **Do not install a clothes dryer with flexible plastic venting materials or flexible metal (foil type) duct. If flexible metal duct is installed, it must be of a specific type identified by the appliance manufacturer as suitable for use with clothes dryers. Flexible venting materials are known to collapse, be easily crushed, and trap lint. These conditions will obstruct clothes dryer airflow and increase the risk of fire.**
- **To reduce the risk of severe injury or death, follow all installation instructions.**
- **Save these instructions.**

IMPORTANT SAFETY INSTRUCTIONS

When discarding or storing your old clothes dryer, remove the door.

SAVE THESE INSTRUCTIONS

INSTALLATION REQUIREMENTS

TOOLS AND PARTS

Gather the required tools and parts before starting installation.

Tools needed:

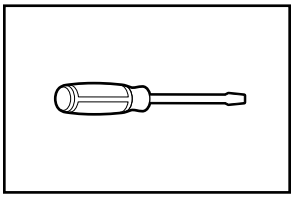

Flat-blade screwdriver

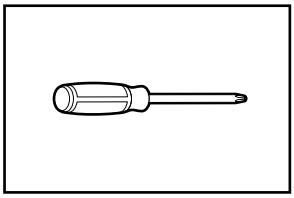

#2 Phillips screwdriver

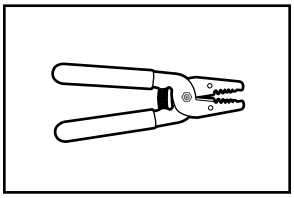

Wire stripper (direct wire installations)

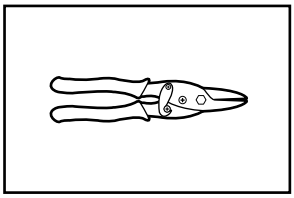

Tin snips (new vent installations)

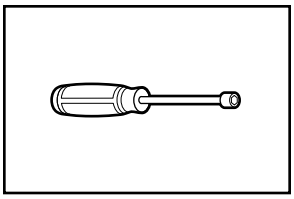

1/4" and 5/16" nut driver (recommended)

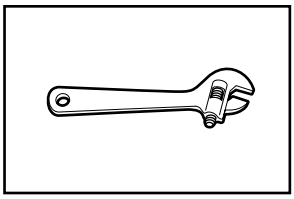

Adjustable wrench that opens to 1" (25 mm) or hex-head socket wrench

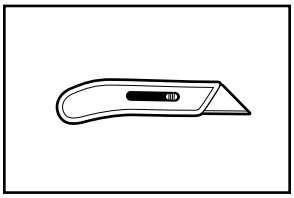

Utility knife

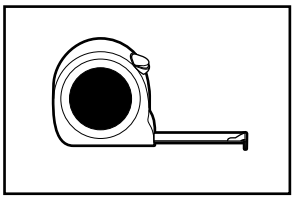

Tape measure

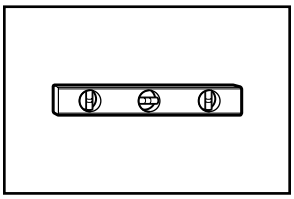

Level

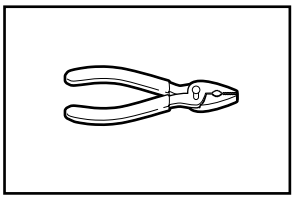

Pliers

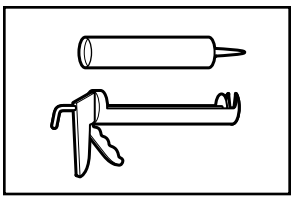

Caulking gun and compound (for installing new exhaust vent)

Parts supplied (all models):

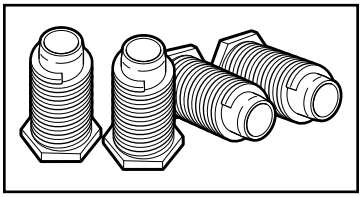

Leveling legs (4)

Parts supplied (steam models):

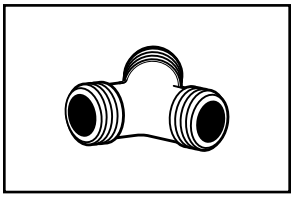

"Y" connector

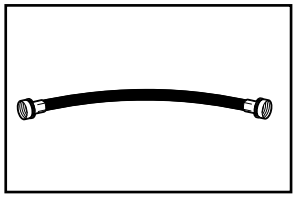

2' (0.6 m) inlet hose

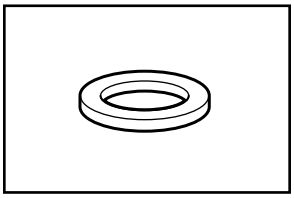

Rubber washer

Parts package is located in dryer drum. Check that all parts are included.

NOTE: Do not use leveling legs supplied with dryer if installing with a pedestal or a stack kit.

Parts needed: (Not supplied with dryer)

- Vent clamps
- Vent elbows and vent work

Parts needed (steam models):

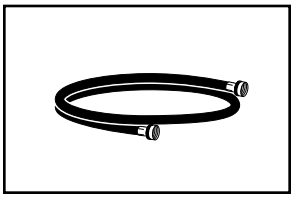

5' (1.52 m) inlet hose

Additional parts may be required, depending on your installation. Check local codes. Check existing electrical supply and venting. Read "Electrical Requirements" and "Venting Requirements" before purchasing parts.

If using a power supply cord:

Use a UL-listed power supply cord kit marked for use with clothes dryers. The kit should contain:

- A UL-listed 30-amp power supply cord, rated 120/240 volt minimum. The cord should be type SRD or SRDT and be at least 4 ft. (1.22 m) long. The wires that connect to the dryer must end in ring terminals or spade terminals with upturned ends.
- A UL-listed strain relief.

Optional Equipment: (Not supplied with dryer)
Refer to your Use and Care Guide for information about accessories available for your dryer.

LOCATION REQUIREMENTS

Check code requirements. Some codes limit, or do not permit, installing dryer in garages, closets, mobile homes, or sleeping quarters. Contact your local building inspector.

⚠WARNING

Explosion Hazard

Keep flammable materials and vapors, such as gasoline, away from dryer.

Place dryer at least 18 inches (460 mm) above the floor for a garage installation.

Failure to do so can result in death, explosion, or fire.

You will need:

- A location allowing for proper exhaust installation. See “Venting Requirements.”
- A separate 30-amp circuit.
- If using power supply cord, a grounded electrical outlet located within 2 ft. (610 mm) of either side of dryer. See “Electrical Requirements.”
- Floor must support dryer weight of 200 lbs. (90.7 kg). Also consider weight of companion appliance.
- Cold water faucets located within 4 ft. (1.2 m) of the water fill valves and water pressure of 20–120 psi (138–827 kPa). You may use the water supply for your washer using the supplied “Y” connector and a short hose (which you will need to purchase).
- Level floor with maximum slope of 1" (25 mm) under entire dryer. If slope is greater than 1" (25 mm), install Extended Dryer Feet Kit, Part Number 279810. If not level, clothes may not tumble properly and automatic sensor cycles may not operate correctly.
- For garage installation, place dryer at least 18" (460 mm) above floor. If using a pedestal, you will need 18" (460 mm) to bottom of dryer.
- The dryer must not be installed or stored in an area where it will be exposed to water and/or weather.

IMPORTANT: Do not operate, install, or store dryer where it will be exposed to water, weather, or at temperatures below 40° F (4° C). Lower temperatures may cause dryer not to shut off at end of automatic sensor cycles, resulting in longer drying times.

Installation Clearances

For each arrangement, consider allowing more space for ease of installation and servicing, spacing for companion appliances, and clearances for walls, doors, and floor moldings. Space must be large enough to allow door to fully open. Add spacing on all sides of dryer to reduce noise transfer. If a closet door or louvered door is installed, top and bottom air openings in door are required.

Check code requirements. Some codes limit, or do not permit, installation of the dryer in garages, closets, mobile homes, or sleeping quarters. Contact your local building inspector.

DRYER DIMENSIONS

Front view:

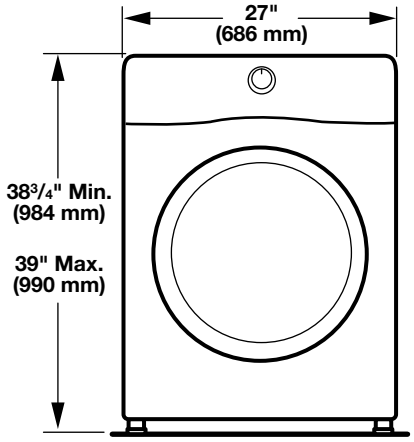

Side view:

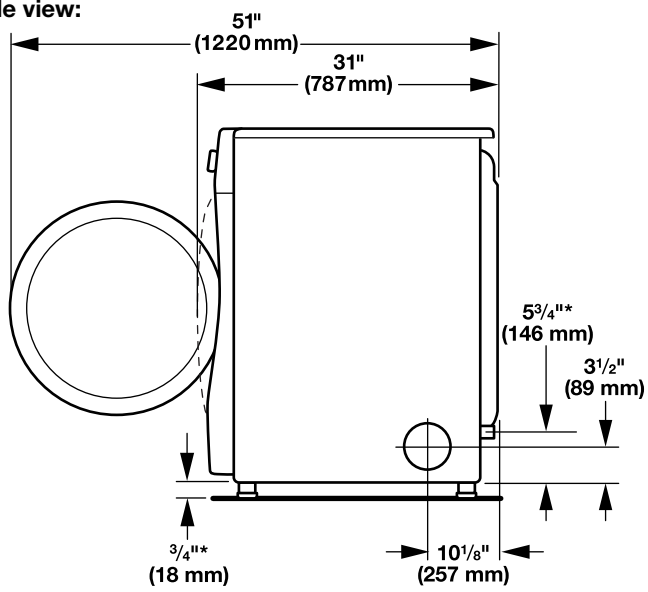

Back view:

NOTE: Most installations require a minimum of 5" (127 mm) clearance behind dryer for exhaust vent with elbow. See “Venting Requirements.”

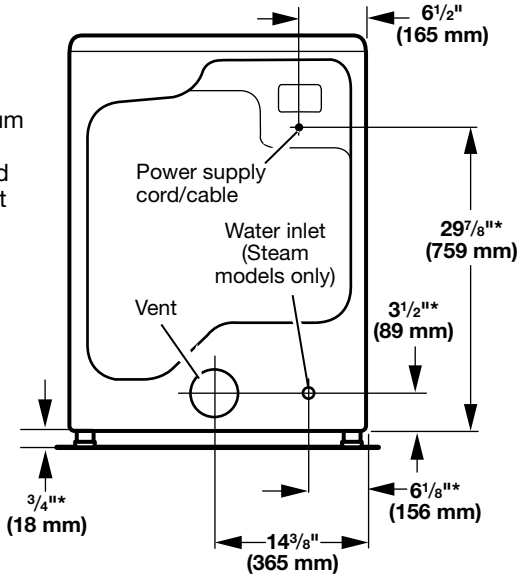

*Approx. measurement.

Installation spacing for recessed area or closet installation

All dimensions show recommended and minimum spacing allowed.

- Additional spacing should be considered for ease of installation and servicing.
- Additional clearances might be required for wall, door, floor moldings, and dryer venting.
- Additional spacing should be considered on all sides of the dryer to reduce noise transfer.
- For closet installation with a door, minimum ventilation openings in the top and bottom of the door are required. Louvered doors with equivalent ventilation openings are acceptable.
- Companion appliance spacing should also be considered.

Recommended installation clearances (dryer only):

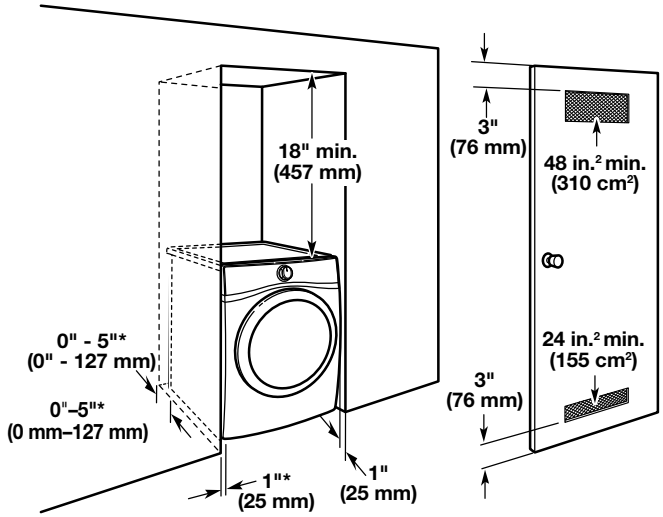

*0" (0 mm) spacing is allowed for straight-back venting only. For steam models only, inlet hose must not be kinked.

Minimum installation clearances (dryer only):

	Front	Sides	Rear	Top
Recessed	NA	0" (0 mm)	0" (0 mm)**	0" (0 mm)
Closet	NA	0" (0 mm)	0" (0 mm)**	0" (0 mm)
Under Counter	NA	1” (25 mm)	0” (0 mm)**	0” (0 mm)

**0" (0 mm) spacing is allowed for straight-back venting only.

Custom under counter installation:

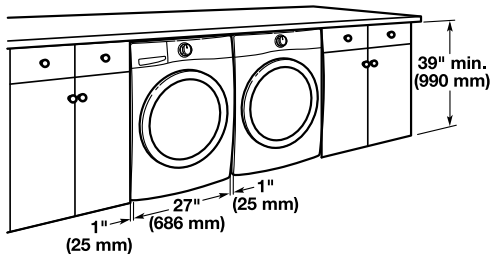

Mobile home – Additional installation requirements:

This dryer is suitable for mobile home installations.
The installation must conform to the Manufactured Home Construction and Safety Standard, Title 24 CFR, Part 3280 (formerly the Federal Standard for Mobile home construction and Safety, Title 24, HUD Part 280) or Standard CAN/CSA-Z240 MH.

Mobile home installations require:

- Metal exhaust system hardware, available for purchase from your dealer. For further information, see “Assistance or Service” section in your Use and Care Guide.
- Special provisions must be made in mobile homes to introduce outside air into dryer. Openings (such as a nearby window) should be at least twice as large as dryer exhaust opening.

ELECTRICAL REQUIREMENTS

It is your responsibility:

- To contact a qualified electrical installer.
- To be sure that the electrical connection is adequate and in conformance with the National Electrical Code, ANSI/ NFPA 70 – latest edition and all local codes and ordinances.

  The National Electrical Code requires a 4-wire power supply connection for homes built after 1996, dryer circuits involved in remodeling after 1996, and all mobile home installations.

  A copy of the above code standards can be obtained from: National Fire Protection Association, One Batterymarch Park, Quincy, MA 02269.
- To supply the required 3- or 4-wire, single phase, 120/240 volt, 60 Hz, AC only electrical supply (or 3- or 4-wire, 120/208 volt electrical supply, if specified on the serial/rating plate) on a separate 30-amp circuit, fused on both sides of the line. Connect to an individual branch circuit. Do not have a fuse in the neutral or grounding circuit.
- Do not use an extension cord.
- If codes permit and a separate ground wire is used, it is recommended that a qualified electrician determine that the ground path is adequate.

Electrical Connection

To properly install your dryer, you must determine the type of electrical connection you will be using and follow the instructions provided for it here.

- This dryer is manufactured ready to install with a 3-wire electrical supply connection. The neutral ground conductor is permanently connected to the neutral conductor (white wire) within the dryer. If the dryer is installed with a 4-wire electrical supply connection, the neutral ground conductor must be removed from the external ground connector (green screw), and secured under the neutral terminal (center or white wire) of the terminal block. When the neutral ground conductor is secured under the neutral terminal (center or white wire) of the terminal block, the dryer cabinet is isolated from the neutral conductor. The green ground wire of the 4-wire power cord must be secured to the dryer cabinet with the green ground screw.
- If local codes do not permit the connection of a neutral ground wire to the neutral wire, see “Optional External Ground for 3-Wire Connection” in the “Power Supply Cord Connection” section.
- A 4-wire power supply connection must be used when the appliance is installed in a location where grounding through the neutral conductor is prohibited. Grounding through the neutral is prohibited for (1) new branch-circuit installations after 1996, (2) mobile homes, (3) recreational vehicles, and (4) areas where local codes prohibit grounding through the neutral conductors.

If using a power supply cord:

Use a UL-listed power supply cord kit marked for use with clothes dryers. The kit should contain:

- A UL-listed 30-amp power supply cord, rated 120/240 volt minimum. The cord should be type SRD or SRDT and be at least 4 ft. (1.22 m) long. The wires that connect to the dryer must end in ring terminals or spade terminals with upturned ends.
- A UL-listed strain relief.

If your outlet looks like this:

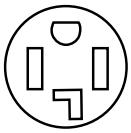

4-wire receptacle (14-30R)

Then choose a 4-wire power supply cord with ring or spade terminals and UL-listed strain relief. The 4-wire power supply cord, at least 4 ft. (1.22 m) long, must have four 10-gauge copper wires and match a 4-wire receptacle of NEMA Type 14-30R. The ground wire (ground conductor) may be either green or bare. The neutral conductor must be identified by a white cover.

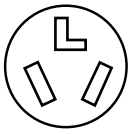

3-wire receptacle (10-30R)

Then choose a 3-wire power supply cord with ring or spade terminals and UL-listed strain relief. The 3-wire power supply cord, at least 4 ft. (1.22 m) long, must have three 10-gauge copper wires and match a 3-wire receptacle of NEMA Type 10-30R.

If connecting by direct wire:

Power supply cable must match power supply (4-wire or 3-wire) and be:

- Flexible armored cable or nonmetallic sheathed copper cable (with ground wire), covered with flexible metallic conduit. All current-carrying wires must be insulated.
- 10-gauge solid copper wire (do not use aluminum) at least 5 ft. (1.52 m) long.

GROUNDING INSTRUCTIONS

- For a grounded, cord-connected dryer:

This dryer must be grounded. In the event of malfunction or breakdown, grounding will reduce the risk of electric shock by providing a path of least resistance for electric current. This dryer uses a cord having an equipment-grounding conductor and a grounding plug. The plug must be plugged into an appropriate outlet that is properly installed and grounded in accordance with all local codes and ordinances.

- For a permanently connected dryer:

This dryer must be connected to a grounded metal, permanent wiring system, or an equipment-grounding conductor must be run with the circuit conductors and connected to the equipment-grounding terminal or lead on the dryer.

WARNING: Improper connection of the equipment-grounding conductor can result in a risk of electric shock. Check with a qualified electrician or service representative or personnel if you are in doubt as to whether the dryer is properly grounded. Do not modify the plug on the power supply cord: if it will not fit the outlet, have a proper outlet installed by a qualified electrician.

SAVE THESE INSTRUCTIONS

INSTALL LEVELING LEGS

⚠ WARNING

Excessive Weight Hazard

Use two or more people to move and install dryer.

Failure to do so can result in back or other injury.

1. Prepare dryer for leveling legs

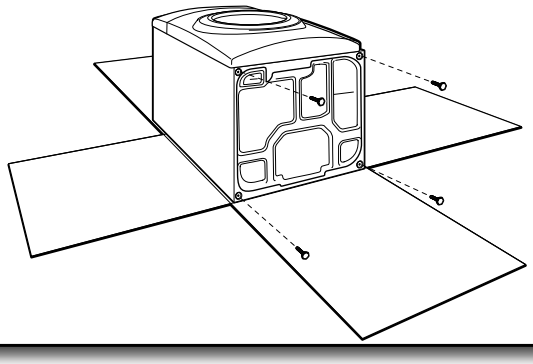

To avoid damaging floor, place a large flat piece of cardboard from dryer carton under entire back edge of dryer. Firmly grasp dryer body (not console panel) and gently lay dryer down on cardboard.

2. Screw in leveling legs

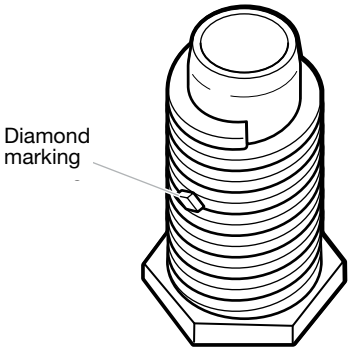

Examine leveling legs and locate diamond marking. Screw legs into leg holes by hand – use a wrench to finish turning legs until diamond marking is no longer visible.

Place a carton corner post from dryer packaging under each of the 2 dryer back corners. Stand the dryer up. Slide the dryer on the corner posts until it is close to its final location. Leave enough room to connect the exhaust vent.

ELECTRICAL INSTALLATION

For power supply cord installations:

⚠ WARNING

Fire Hazard

Use a new UL listed 30 amp power supply cord.

Use a UL listed strain relief.

Disconnect power before making electrical connections.

Connect neutral wire (white or center wire) to center terminal (silver).

Ground wire (green or bare wire) must be connected to green ground connector.

Connect remaining 2 supply wires to remaining 2 terminals (gold).

Securely tighten all electrical connections.

Failure to do so can result in death, fire, or electrical shock.

Before you start: disconnect power.

1. Choose electrical connection type

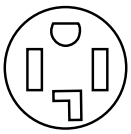

Power supply cord 4-wire receptacle (NEMA Type 14-30R).
Go to “Power Supply Cord Connection.”

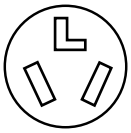

Power supply cord 3-wire receptacle (NEMA Type 10-30R).
Go to “Power Supply Cord Connection.”

4-wire direct connection:
Go to “Direct Wire Connection.”

3-wire direct connection:
Go to “Direct Wire Connection.”

NOTE: If local codes do not permit connection of a cabinet-ground conductor to neutral wire, go to “Optional 3-wire connection.” This connection may be used with either a power supply cord or a direct wire connection.

For direct wire installations:

⚠ WARNING

Fire Hazard

Use 10 gauge copper wire.

Use a UL listed strain relief.

Disconnect power before making electrical connections.

Connect neutral wire (white or center wire) to center terminal (silver).

Ground wire (green or bare wire) must be connected to green ground connector.

Connect remaining 2 supply wires to remaining 2 terminals (gold).

Securely tighten all electrical connections.

Failure to do so can result in death, fire, or electrical shock.

2. Remove terminal block cover

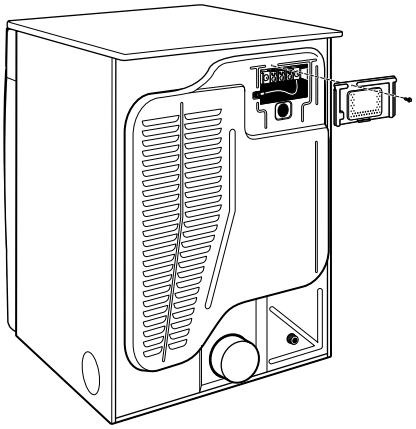

Remove hold-down screw and terminal block cover.

Power Supply Cord Connection

Power supply cord strain relief

1. Attach power supply cord strain relief

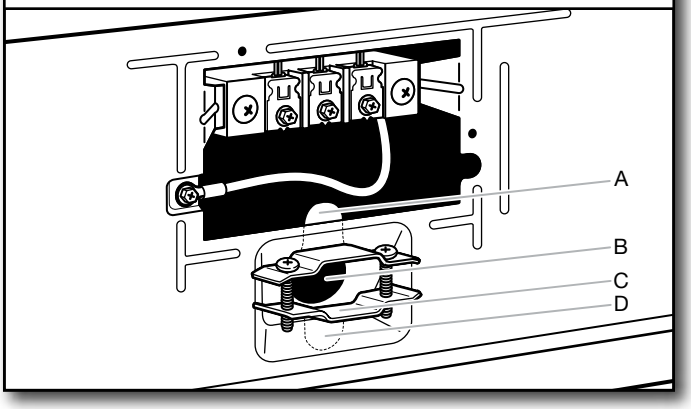

Remove the screws from a 3/4" (19 mm) UL-listed strain relief (UL marking on strain relief). Put the tabs of the two clamp sections (C) into the hole below the terminal block opening (B) so that one tab is pointing up (A) and the other is pointing down (D), and hold in place. Tighten strain relief screws just enough to hold the two clamp sections (C) together.

2. Attach power supply cord to strain relief

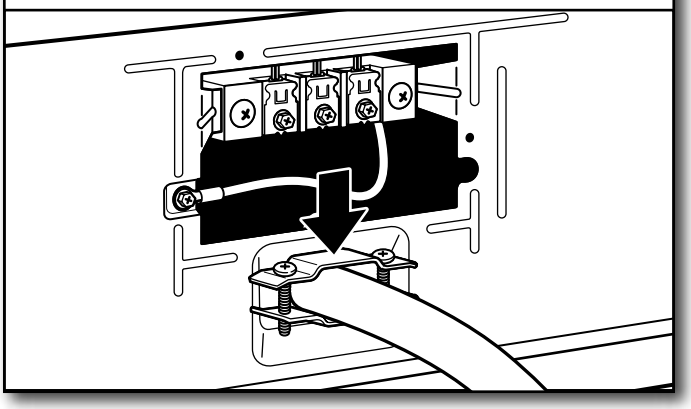

Put power supply cord through the strain relief. Be sure that the wire insulation on the power supply cord is inside the strain relief. The strain relief should have a tight fit with the dryer cabinet and be in a horizontal position. Do not further tighten strain relief screws at this point.

If your outlet looks like this:

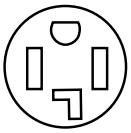

Power supply cord 4-wire receptacle (NEMA Type 14-30R):
Go to “4-Wire Power Supply Cord Connection” on this page.

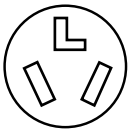

Power supply cord 3-wire receptacle (NEMA Type 10-30R):
Go to “3-Wire Power Supply Cord Connection” on page 9.

4-Wire Power Supply Cord Connection

IMPORTANT: A 4-wire connection is required for mobile homes and where local codes do not permit the use of 3-wire connections.

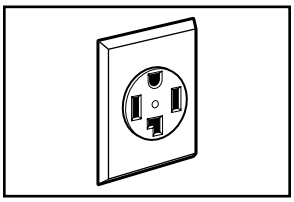

4-wire receptacle (NEMA type 14-30R)

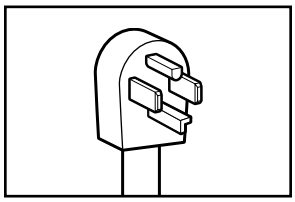

4-prong plug

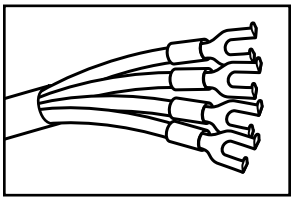

Spade terminals with upturned ends

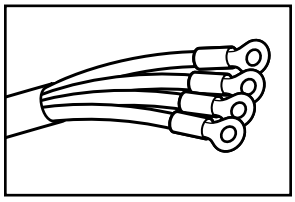

Ring terminals

1. Prepare to connect neutral ground wire and neutral wire

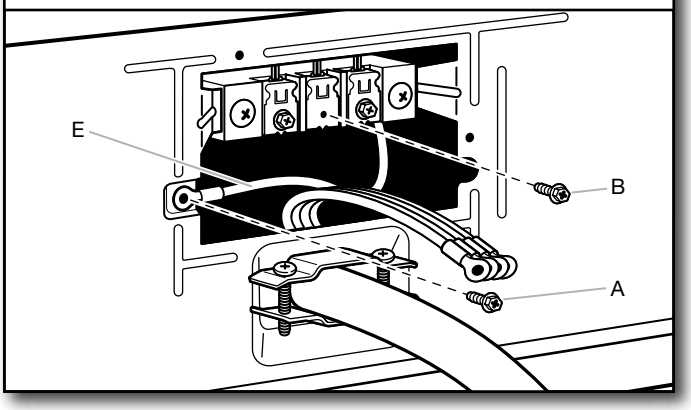

Remove center terminal block screw (B). Remove neutral ground wire (E) from green external ground conductor screw (A).

2. Connect neutral ground wire and neutral wire

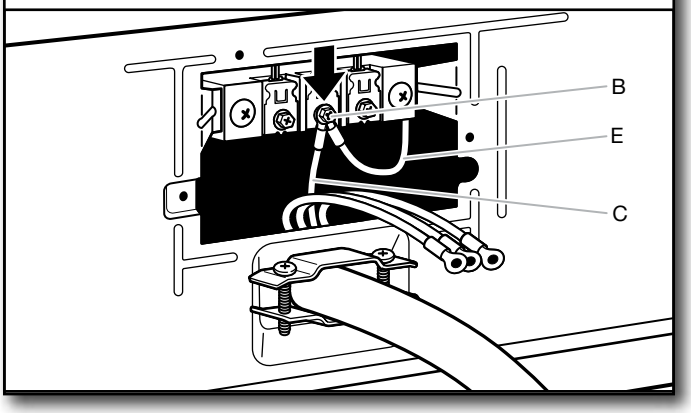

Connect neutral ground wire (E) and neutral wire (white or center) (C) of power supply cord under center terminal block screw (B). Tighten screw.

3. Connect ground wire

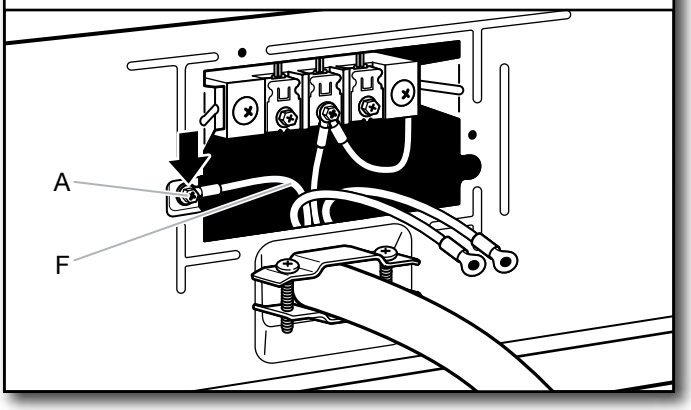

Connect ground wire (F) (green or bare) of power supply cord under green external ground conductor screw (A). Tighten screw.

4. Connect remaining wires

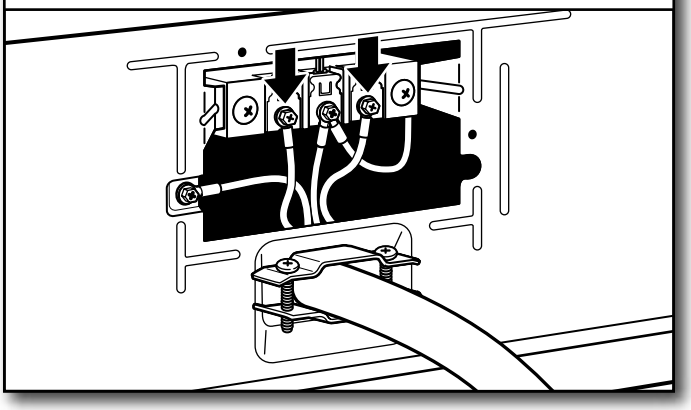

Connect remaining wires under outer terminal block screws. Tighten screws. Finally, reinsert tab of terminal block cover into slot of dryer rear panel. Secure cover with hold-down screw. Now go to “Venting Requirements.”

3-Wire Power Supply Cord Connection

Use where local codes permit connecting cabinet-ground conductor to neutral wire.

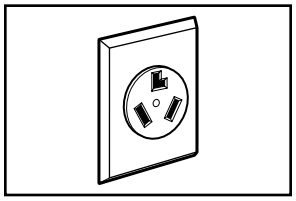

3-wire receptacle (NEMA type 10-30R)

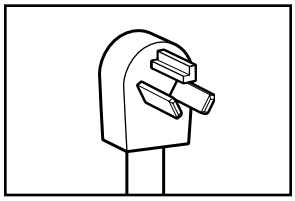

3-prong plug

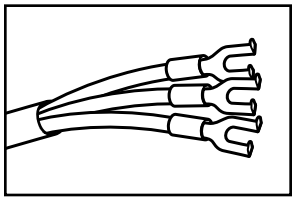

Spade terminals with upturned ends

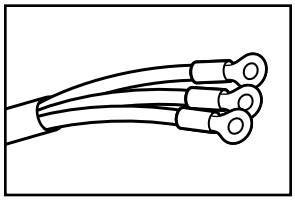

Ring terminals

1. Remove center screw

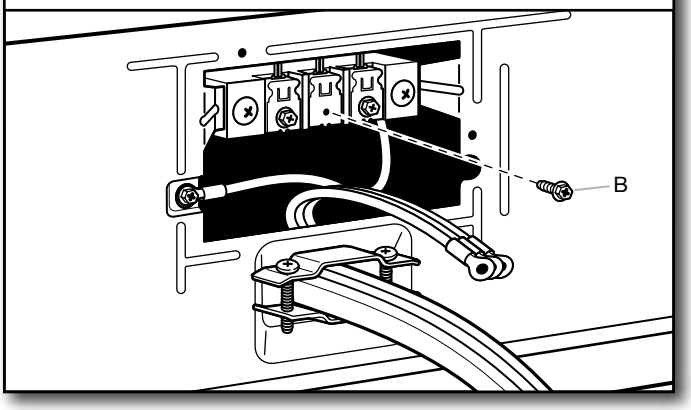

Remove center terminal block screw (B).

2. Connect neutral wire

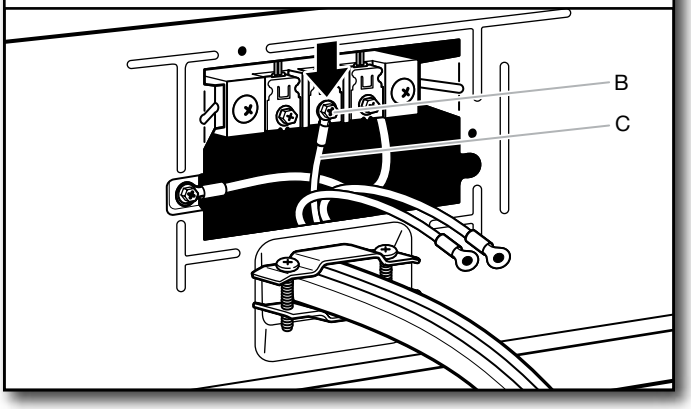

Connect neutral wire (white or center) (C) of power supply cord under center terminal block screw (B). Tighten screw.

3. Connect remaining wires

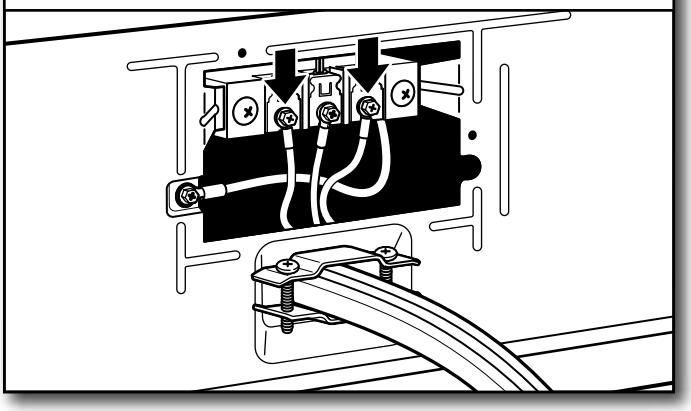

Connect remaining wires under outer terminal block screws. Tighten screws. Finally, reinsert tab of terminal block cover into slot of dryer rear panel. Secure cover with hold-down screw. Now go to “Venting Requirements.”

Direct Wire Connection

Direct wire strain relief

1. Attach direct wire strain relief

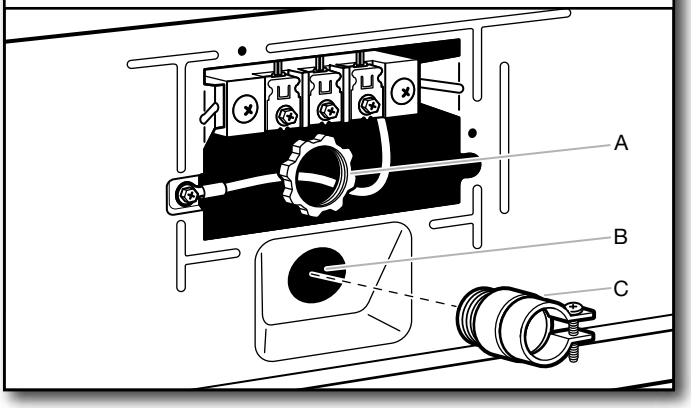

Unscrew the removable conduit connector (A) and any screws from a 3/4" (19 mm) UL-listed strain relief (UL marking on strain relief). Put the threaded section of the strain relief (C) through the hole below the terminal block opening (B). Reaching inside the terminal block opening, screw the removable conduit connector (A) onto the strain relief threads and tighten securely.

2. Attach direct wire cable to strain relief

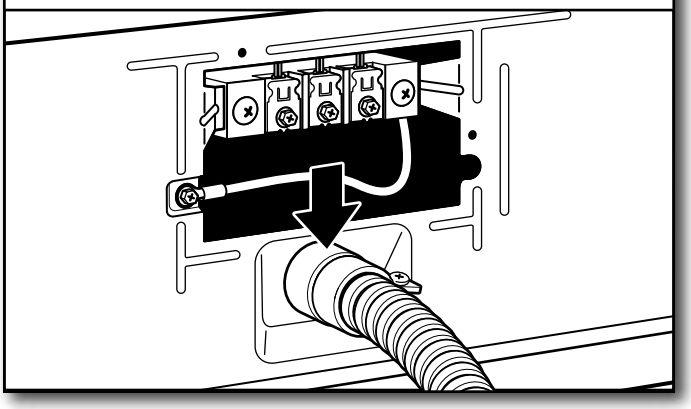

Put direct wire cable through the strain relief. The strain relief should have a tight fit with the dryer cabinet and be in a horizontal position. Tighten strain relief screw against the direct wire cable.

If your wiring looks like this:

4-wire direct connection:
Go to “4-Wire Direct Wire Connection” on this page.

3-wire direct connection:
Go to “3-Wire Direct Wire Connection” on page 11.

4-Wire Direct Wire Connection

IMPORTANT: A 4-wire connection is required for mobile homes and where local codes do not permit 3-wire connections.

1. Prepare your 4-wire cable for direct connection

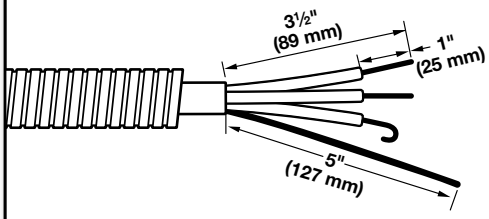

Direct wire cable must have 5 ft. (1.52 m) of extra length so dryer may be moved if needed.

Strip 5" (127 mm) of outer covering from end of cable, leaving bare ground wire at 5" (127 mm). Cut 1½" (38 mm) from remaining 3 wires. Strip insulation back 1" (25 mm). Shape ends of wires into hooks.

2. Prepare to connect neutral ground wire and neutral wire

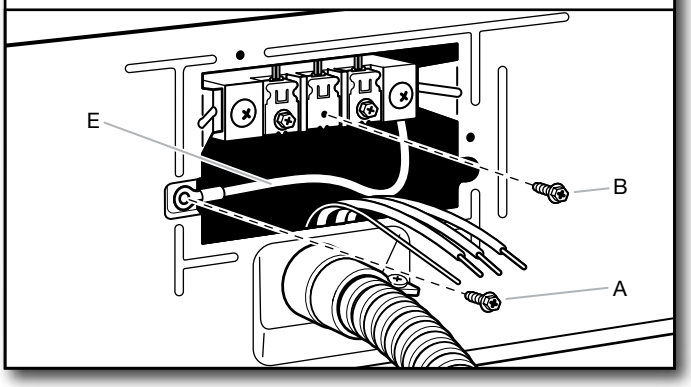

Remove center terminal block screw (B). Remove neutral ground wire (E) from green external ground conductor screw (A).

3. Connect neutral ground wire and neutral wire

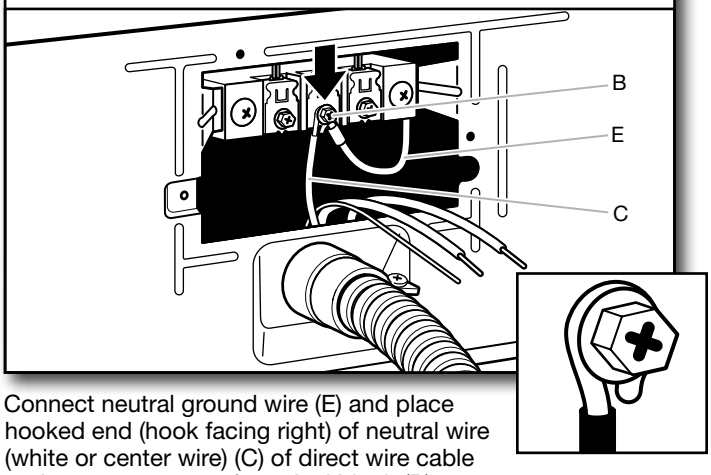

Connect neutral ground wire (E) and place hooked end (hook facing right) of neutral wire (white or center wire) (C) of direct wire cable under center screw of terminal block (B). Squeeze hooked ends together and tighten screw.

4. Connect ground wire

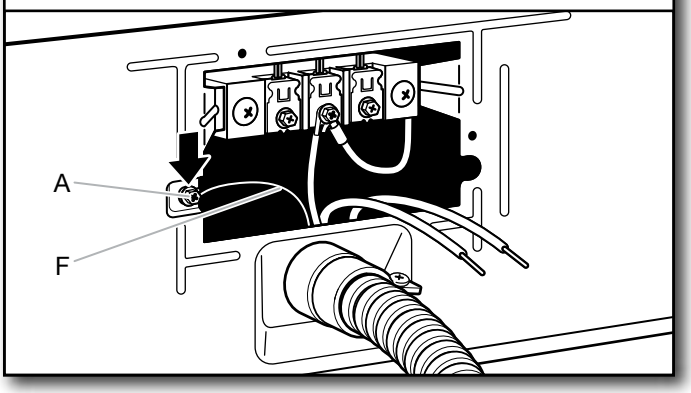

Connect ground wire (green or bare) (F) of direct wire cable under green external ground conductor screw (A). Tighten screw.

5. Connect remaining wires

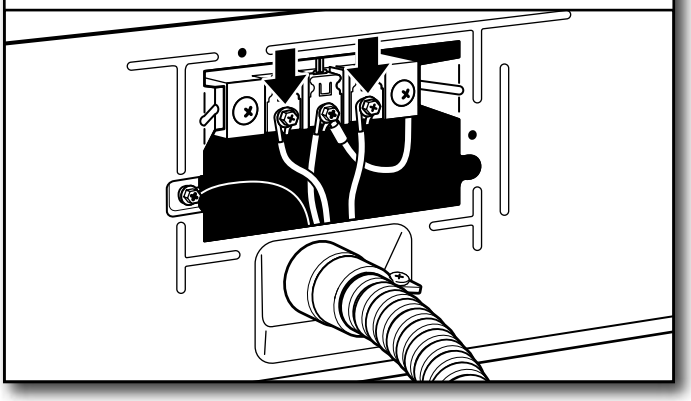

Place hooked ends of remaining direct wire cable wires under outer terminal block screws (hooks facing right). Squeeze hooked ends together and tighten screws. Finally, reinsert tab of terminal block cover into slot of dryer rear panel. Secure cover with hold-down screw. Now go to “Venting Requirements.”

3-Wire Direct Wire Connection

Use where local codes permit connecting cabinet-ground conductor to neutral wire.

1. Prepare your 3-wire cable for direct connection

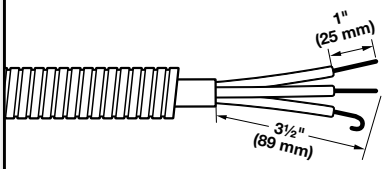

Direct wire cable must have 5 ft. (1.52 m) of extra length so dryer may be moved if needed.

Strip 3½" (89 mm) of outer covering from end of cable. Strip insulation back 1" (25 mm). If using 3-wire cable with ground wire, cut bare wire even with outer covering. Shape wire ends into hooks.

2. Remove center screw

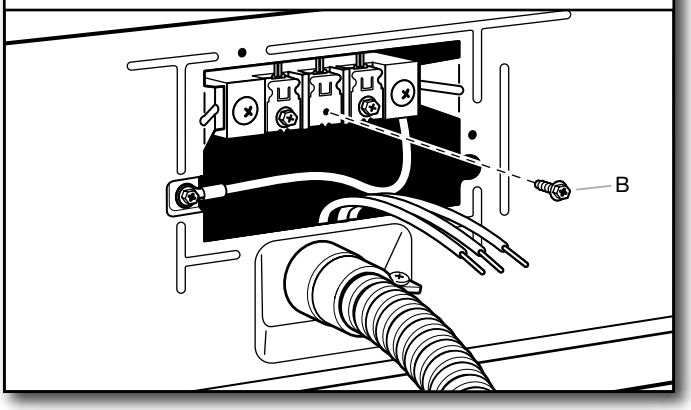

Remove center terminal block screw (B).

3. Connect neutral wire

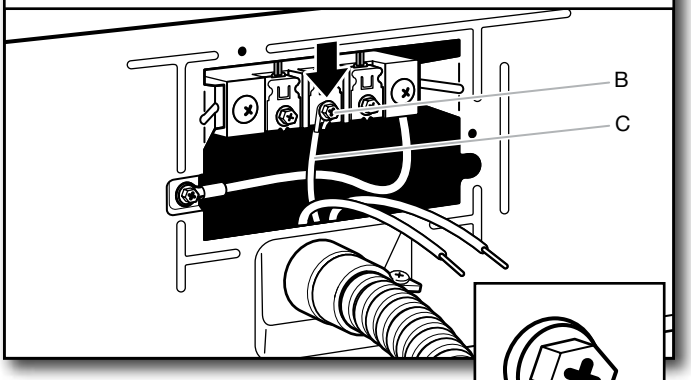

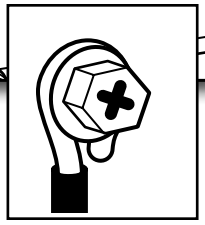

Place hooked end of neutral wire (white or center) (C) of direct wire cable under center terminal block screw (B), hook facing right. Squeeze hooked end together. Tighten screw.

4. Connect remaining wires

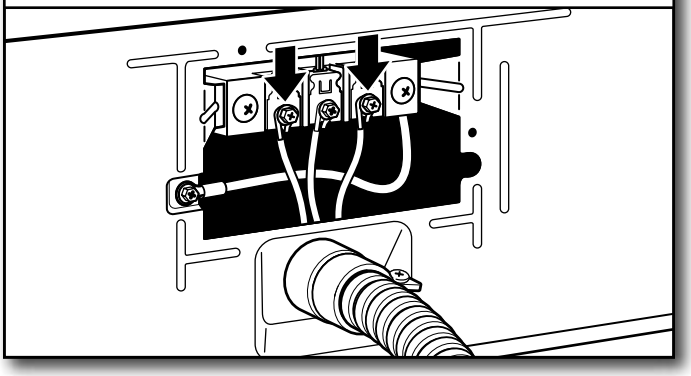

Place hooked ends of remaining direct wire cable wires under outer terminal block screws (hooks facing right). Squeeze hooked ends together and tighten screws. Finally, reinsert tab of terminal block cover into slot of dryer rear panel. Secure cover with hold-down screw. Now go to “Venting Requirements.”

Optional External Ground for 3-Wire Connection (Power Supply Cord Shown)

IMPORTANT: You must verify with a qualified electrician that this grounding method is acceptable before connecting.

1. Prepare to connect neutral ground wire and neutral wire

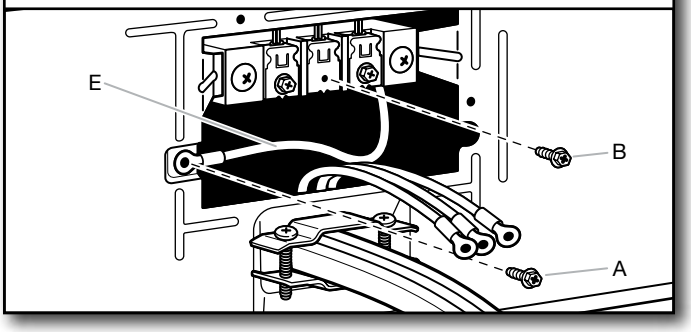

Install the correct strain relief for your electrical connection method, as shown on page 8 or 10.

Remove center terminal block screw (B). Remove neutral ground wire (E) from green external ground conductor screw (A).

2. Connect neutral ground wire and neutral wire

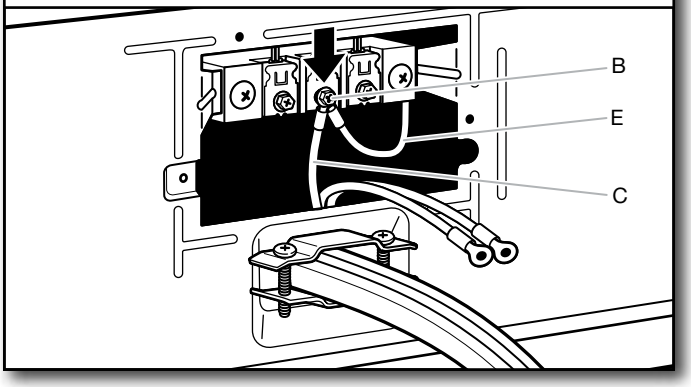

Connect neutral ground wire (E) and neutral wire (white or center wire) (C) of power supply cord or cable under center terminal block screw (B). Tighten screw.

3. Connect remaining wires

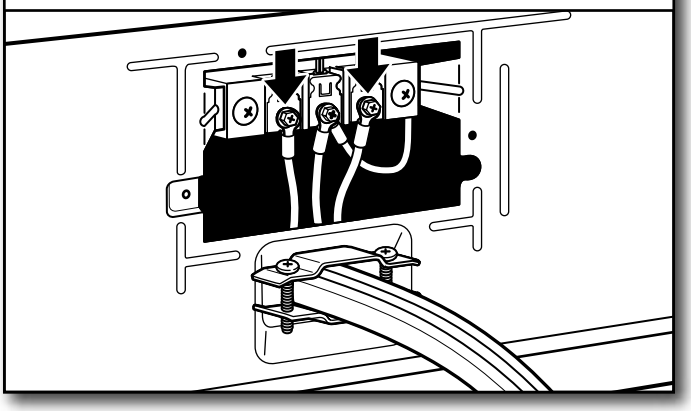

Place ends of remaining wires under outer terminal block screws. Tighten screws.

4. Connect external ground wire

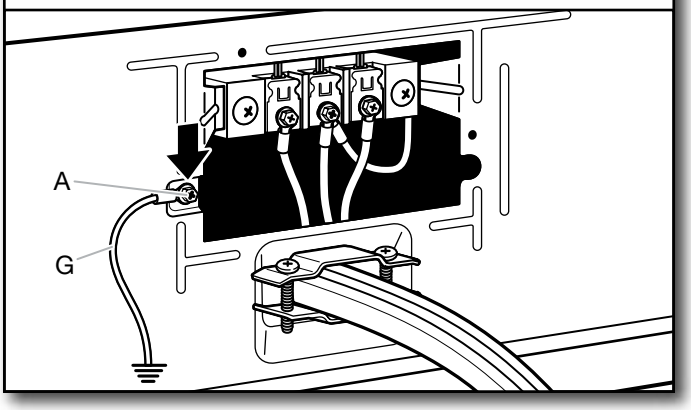

Connect a separate copper ground wire (G) under the green external ground conductor screw (A) to an adequate ground. Finally, reinsert tab of terminal block cover into slot of dryer rear panel. Secure cover with hold-down screw. Now go to "Venting Requirements."

VENTING

Venting Requirements

⚠ WARNING

Fire Hazard

Use a heavy metal vent.

Do not use a plastic vent.

Do not use a metal foil vent.

Failure to follow these instructions can result in death or fire.

WARNING: To reduce the risk of fire, this dryer MUST BE EXHAUSTED OUTDOORS.

IMPORTANT: Observe all governing codes and ordinances. Dryer exhaust must not be connected into any gas vent, chimney, wall, ceiling, attic, crawlspace, or a concealed space of a building. Only rigid or flexible metal vent shall be used for exhausting.

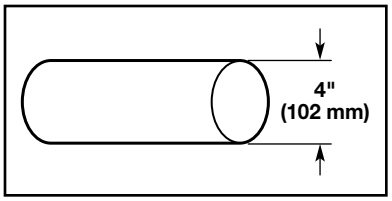

4" (102 mm) heavy metal exhaust vent

- Only a 4" (102 mm) heavy metal exhaust vent and clamps may be used.
- Do not use plastic or metal foil vent.

Rigid metal vent:

- Recommended for best drying performance and to avoid crushing and kinking.

Flexible metal vent: (acceptable only if accessible to clean)

- Must be fully extended and supported in final dryer location.
- Remove excess to avoid sagging and kinking that may result in reduced airflow and poor performance.
- Do not install in enclosed walls, ceilings, or floors.
- The total length should not exceed 7³/₄ ft. (2.4 m).
- The length of flexible metal vent used must be included in the overall vent system design as shown in the "Vent System Charts."

NOTE: If using an existing vent system, clean lint from entire length of the system and make sure exhaust hood is not plugged with lint. Replace plastic or metal foil vents with rigid metal or flexible metal vents. Review "Vent System Charts" and, if necessary, modify existing vent system to achieve best drying performance.

Exhaust hoods:

- An exhaust hood should cap the vent to keep rodents and insects from entering the home.
- Must be at least 12" (305 mm) from ground or any object that may obstruct exhaust (such as flowers, rocks, bushes, or snow).
- Do not use an exhaust hood with a magnetic latch.

Recommended Styles:

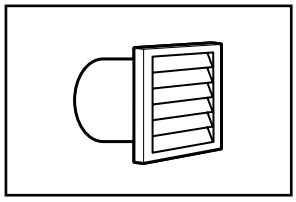

Louvered Hood

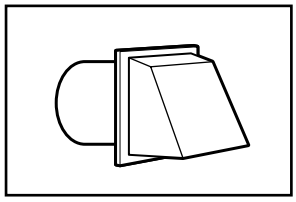

Box Hood

Acceptable Style:

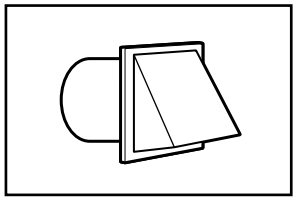

Angled Hood

Elbows:

- 45° elbows provide better airflow than 90° elbows.

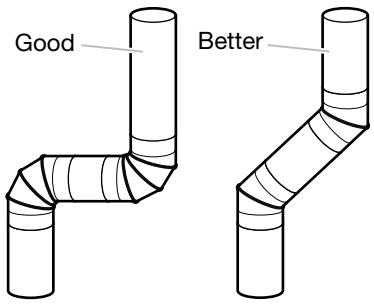

Clamps:

- Use clamps to seal all joints.
- Exhaust vent must not be connected or secured with screws or other fastening devices that extend into interior of duct and catch lint. Do not use duct tape.

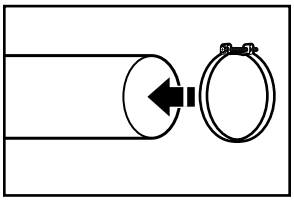

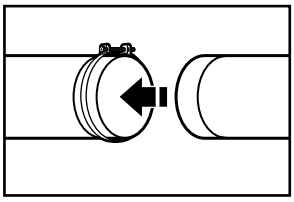

Improper venting can cause moisture and lint to collect indoors, which may result in:

- Moisture damage to woodwork, furniture, paint, wallpaper, carpets, etc.
- Housecleaning problems and health problems.

Plan Vent System

Choose your exhaust installation type

Recommended exhaust installation:

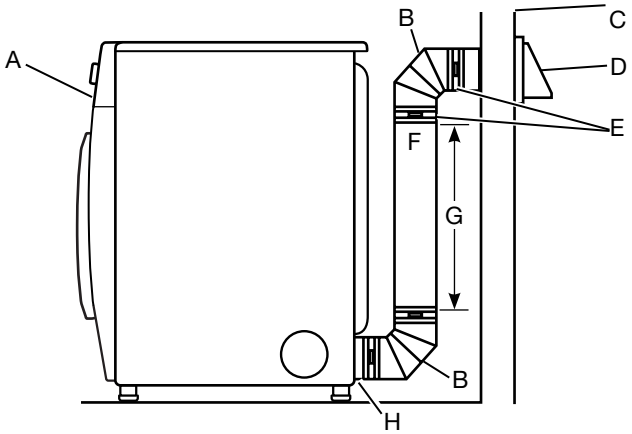

A.	Dryer	E.	Clamps
B.	Elbow	F.	Rigid metal or flexible metal vent
C.	Wall	G.	Vent length necessary to connect elbows
D.	Exhaust hood	H.	Exhaust outlet

⚠WARNING

Fire Hazard

Cover unused exhaust holes with a manufacturer's exhaust cover kit.

Contact your local dealer.

Failure to follow these instructions can result in death, fire, electrical shock, or serious injury.

Optional exhaust installations:

This dryer can be converted to exhaust out the right side, left side (all models except long vent), or through the bottom. If you prefer, you may contact your local dealer to have the dryer converted.

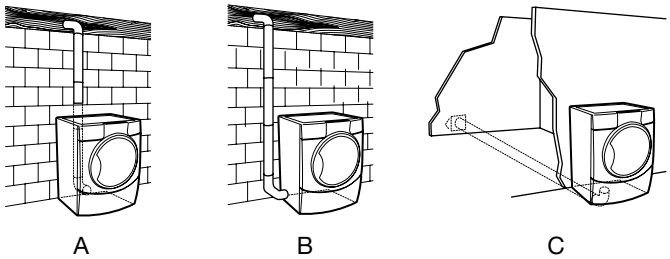

A. Standard rear offset exhaust installation
B. Left- or right-side exhaust installation
C. Bottom exhaust installation

Special provisions for mobile homes:

Exhaust vent must be securely fastened to a noncombustible portion of mobile home and must not terminate beneath the mobile home. Terminate exhaust vent outside.

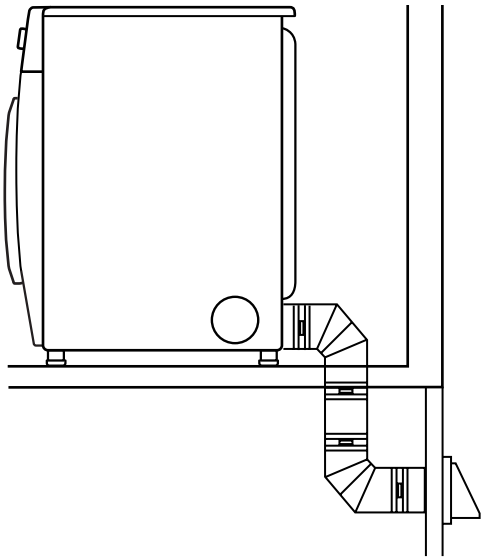

Determine vent path:

- Select route that will provide straightest and most direct path outdoors.
- Plan installation to use fewest number of elbows and turns.
- When using elbows or making turns, allow as much room as possible.
- Bend vent gradually to avoid kinking.
- Use as few 90° turns as possible.

Determine vent length and elbows needed for best drying performance:

- Use the following "Vent System Charts" to determine type of vent material and hood combinations acceptable to use.

  NOTE: Do not use vent runs longer than those specified in "Vent System Charts."

  Exhaust systems longer than those specified will:

  - Shorten life of dryer.
  - Reduce performance, resulting in longer drying times and increased energy usage.

The "Vent System Charts" provide venting requirements that will help achieve best drying performance.

Standard Vent System Chart

Number of 90° elbows	Type of vent	Angled hoods
0	Rigid metal	64 ft. (20 m)
1	Rigid metal	54 ft. (16.5 m)
2	Rigid metal	44 ft. (13.4 m)
3	Rigid metal	35 ft. (10.7 m)
4	Rigid metal	27 ft. (8.2 m)

Long Vent System Chart

Number of 90° elbows	Type of vent	Angled hoods
0	Rigid metal	160 ft. (48.8 m)
1	Rigid metal	150 ft. (45.7 m)
2	Rigid metal	140 ft. (42.7 m)
3	Rigid metal	130 ft. (39.6 m)
4	Rigid metal	120 ft. (36.6 m)

To determine if your model has a long vent system, refer to the type code located on the serial number plate in the inner door well. Example: An electric model would be DA**LV** (Long Vent) – ELE – XXXXXXX-XXX.

NOTE: For long vent systems, use of box/louvered hoods will improve venting, regardless of length.

Install Vent System

1. Install exhaust hood

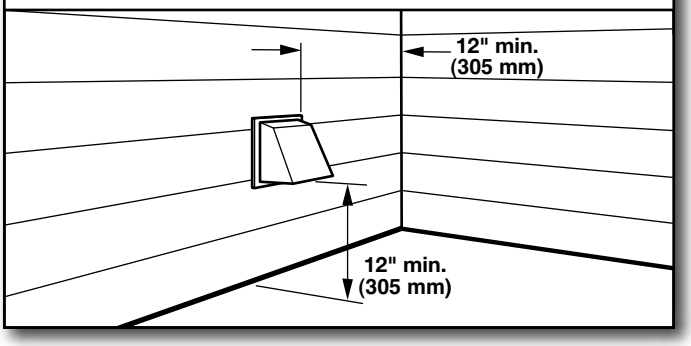

Install exhaust hood and use caulking compound to seal exterior wall opening around exhaust hood.

2. Connect vent to exhaust hood

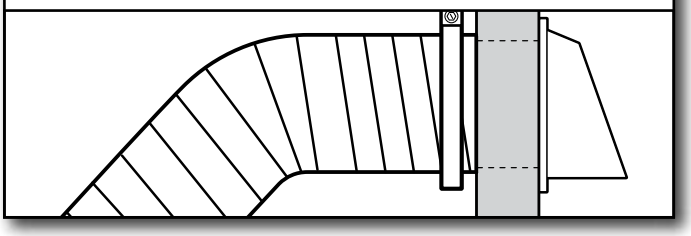

Vent must fit over the exhaust hood. Secure vent to exhaust hood with 4" (102 mm) clamp. Run vent to dryer location using straightest path possible. Avoid 90° turns. Use clamps to seal all joints. Do not use duct tape, screws, or other fastening devices that extend into interior of vent to secure vent, because they can catch lint.

CONNECT INLET HOSE (STEAM MODEL ONLY)

For non-steam models, skip to "Connect Vent."

The dryer must be connected to the cold water faucet using new inlet hoses (not supplied). Do not use old hoses.

NOTE: Replace inlet hoses after 5 years of use to reduce the risk of hose failure. Record hose installation or replacement dates on the hoses for future reference.

Periodically inspect and replace hoses if bulges, kinks, cuts, wear, or leaks are found.

1. Turn cold water off, remove hose, and replace rubber washer

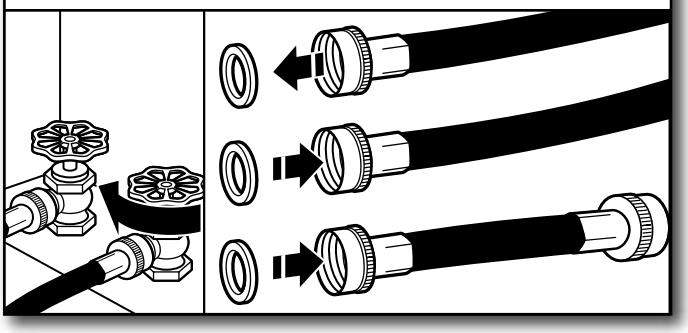

Turn cold water faucet off and remove washer inlet hose.

Remove old rubber washer from inlet hose and replace with new rubber washer.

2. Attach short hose and "Y" connector

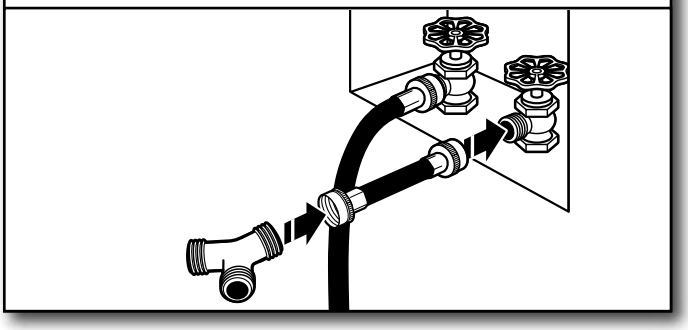

Attach 2 ft (0.6 m) inlet hose to cold water faucet. Screw on coupling by hand until it is seated on faucet. Then attach "Y" connector to male end of the 2 ft (0.6 m) inlet hose. Screw on coupling by hand until it is seated on connector.

3. Tighten couplings

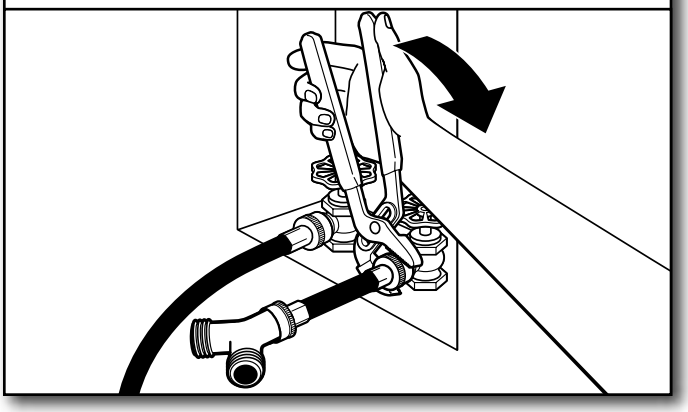

Using pliers, tighten the couplings with additional two-thirds turn.

NOTE: Do not overtighten. Damage to the coupling can result.

4. Attach long hose to "Y" connector and tighten couplings

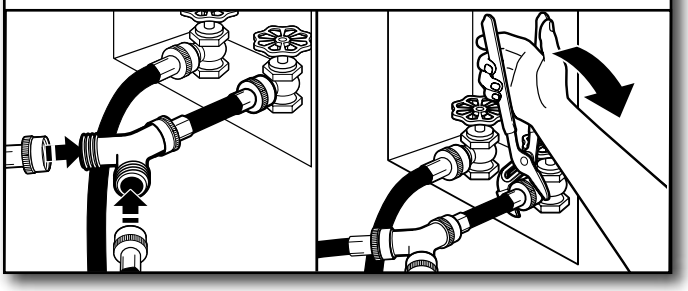

Attach one of the 5 ft (1.5 m) inlet hose ends to the "Y" connector. Attach washer cold inlet hose to other side of "Y" connector. Screw on coupling by hand until it is seated on connector. Using pliers, tighten the couplings an additional two-thirds turn.

NOTE: Do not overtighten. Damage to the coupling can result.

5. Attach long hose to dryer fill valve and tighten coupling

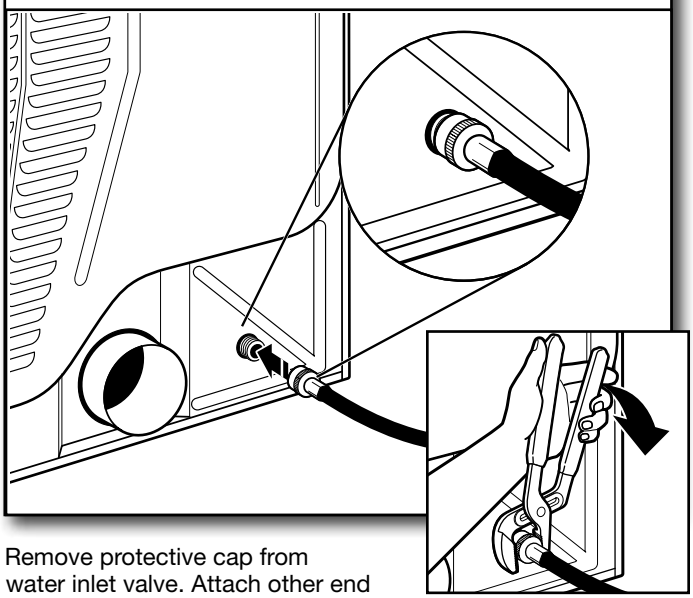

Remove protective cap from water inlet valve. Attach other end of long hose to fill valve at bottom of dryer back panel. Screw on coupling by hand until it is seated on fill valve connector. Using pliers, tighten the couplings an additional two-thirds turn.

NOTE: Do not overtighten. Damage to the coupling can result.

6. Turn on cold water faucet

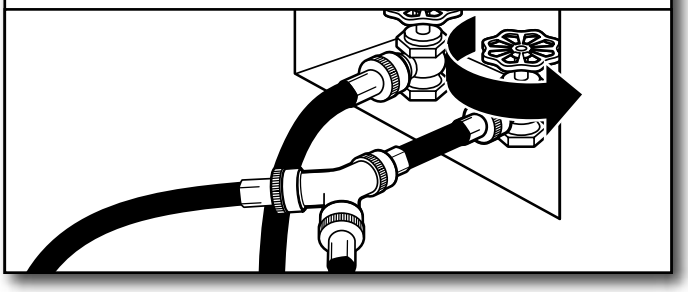

Check that the water faucets are turned on.

7. Check for leaks

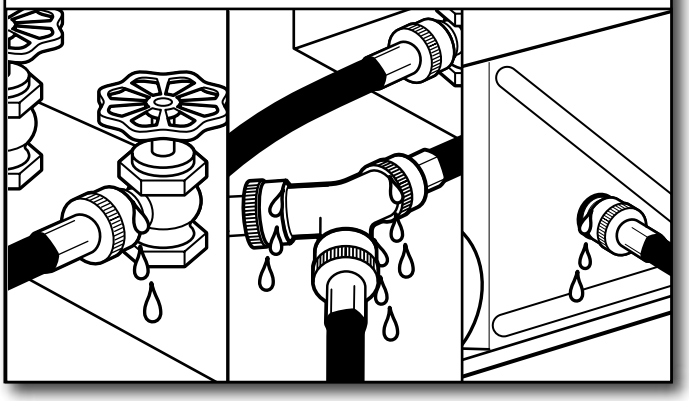

Check for leaks around "Y" connector, faucet, and hoses.

CONNECT VENT

1. Connect vent to exhaust outlet

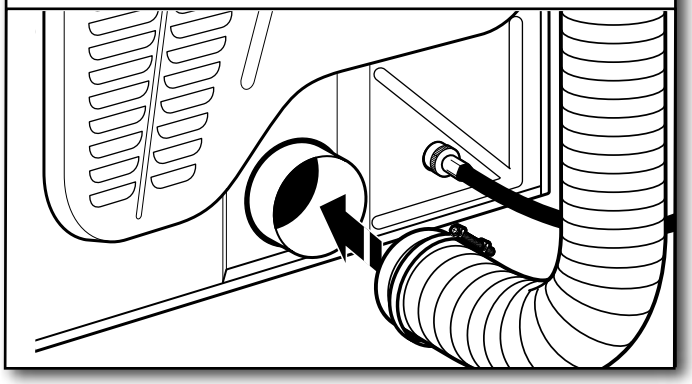

Using a 4" (102 mm) clamp, connect vent to exhaust outlet in dryer. If connecting to existing vent, make sure vent is clean. Dryer vent must fit over dryer exhaust outlet and inside exhaust hood. Check that vent is secured to exhaust hood with a 4" (102 mm) clamp.

2. Move dryer to final location

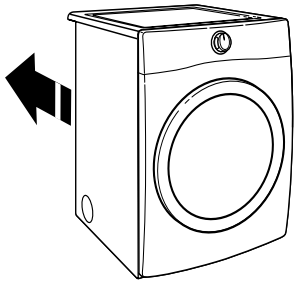

Move dryer to final location, taking care not to crush or kink vent.

After dryer is in place, remove corner posts and cardboard from under dryer.

LEVEL DRYER

1. Level dryer

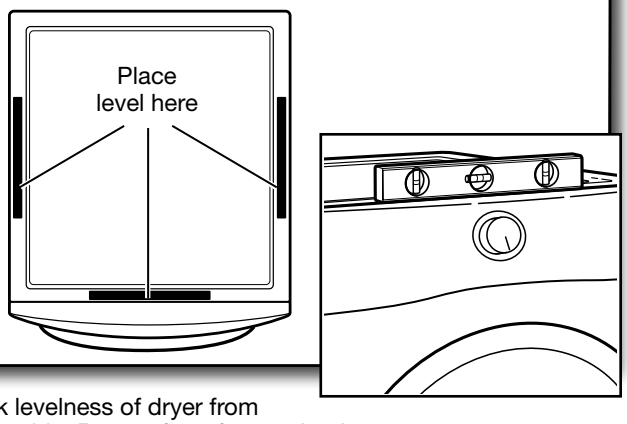

Check levelness of dryer from side to side. Repeat from front to back.

NOTE: The dryer must be level for the moisture sensing system to operate correctly.

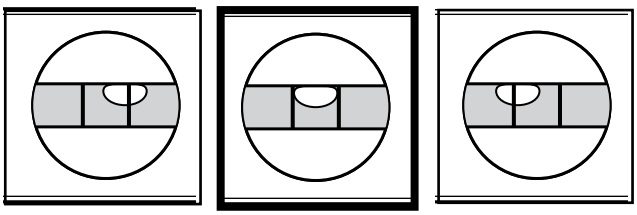

Not Level | **LEVEL** | Not Level

2. Adjust leveling legs

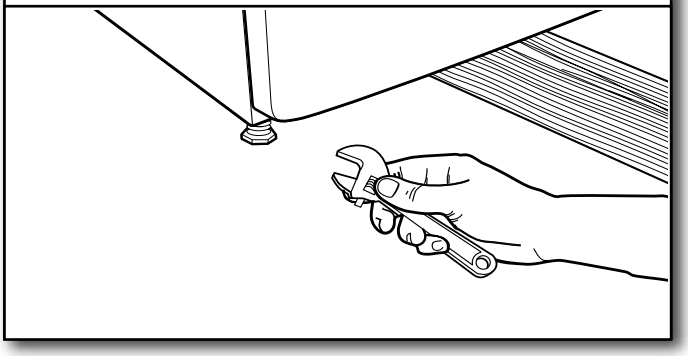

If dryer is not level, prop up using a wood block, use wrench to adjust legs up or down, and check again for levelness. Once dryer is level, make sure all four legs are snug against the floor and dryer does not rock.

COMPLETE INSTALLATION CHECKLIST

- ❑ Check that all parts are now installed. If there is an extra part, go back through steps to see what was skipped.
- ❑ Check that you have all of your tools.
- ❑ Dispose of/recycle all packaging materials.
- ❑ Be sure the water faucets are on.
- ❑ Check for leaks around “Y” connector, faucet, and hoses.
- ❑ Check dryer’s final location. Be sure vent is not crushed or kinked.
- ❑ Check that dryer is level. See “Level Dryer.”
- ❑ Remove film on console and any tape remaining on dryer.
- ❑ Wipe dryer drum interior thoroughly with a damp cloth to remove any dust.
- ❑ Read “Dryer Use” in your Use and Care Guide.
- ❑ For power supply cord installation, plug into a grounded outlet. For direct wire installation, turn on power.
- ❑ If you live in a hard water area, use of a water softener is recommended to control the buildup of scale through the water system in the dryer. Over time, the buildup of lime scale may clog different parts of the water system, which will reduce product performance. Excessive scale buildup may lead to the need for certain part replacement or repair.
- ❑ Select a Time Dry heated cycle, and start dryer. Do not select Air Only Temperature setting.

  If dryer will not start, check the following:
  - Controls are set in a running or “On” position.
  - Start button has been pushed firmly.
  - Dryer is plugged into an outlet and/or electrical supply.
  - Household fuse is intact and tight, or circuit breaker has not tripped.
  - Dryer door is closed.

This dryer automatically runs an installation diagnostic routine at the start of its first cycle.

NOTE: You may notice an odor when dryer is first heated. This odor is common when heating element is first used. The odor will go away.

DOOR REVERSAL (OPTIONAL)

The following instructions are for models with round and square-shaped doors.

Tools needed:

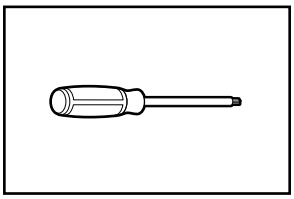

Min. 8" long TORX T25® † screwdriver

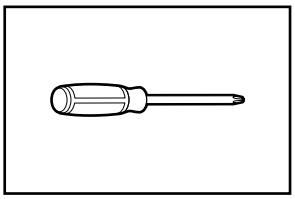

#2 Phillips screwdriver

Reverse door swing round-shaped door with flat glass – single handle

1. Remove door from dryer

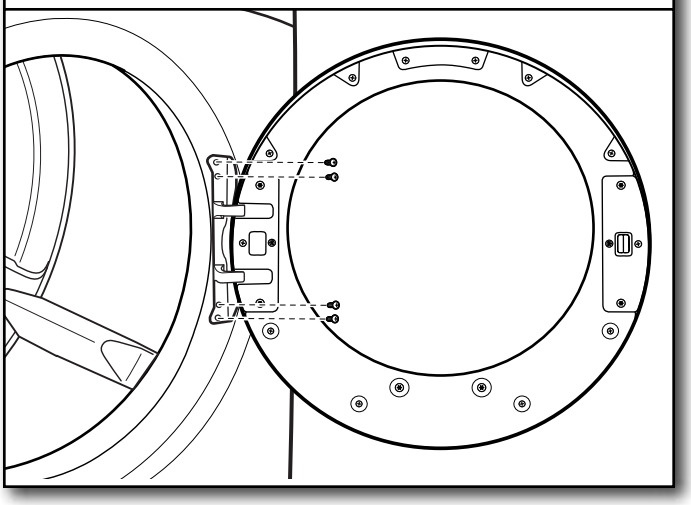

IMPORTANT: If the protective film has not yet been removed from the dryer, peel the film from the dryer door before proceeding.

Using a T25® screwdriver, remove the 4 screws securing the door hinge to the dryer and lift up and out to remove the door. Place the door on a soft towel or other non-scratch surface. Reinstall the 4 screws in the holes.

2. Move the door strike

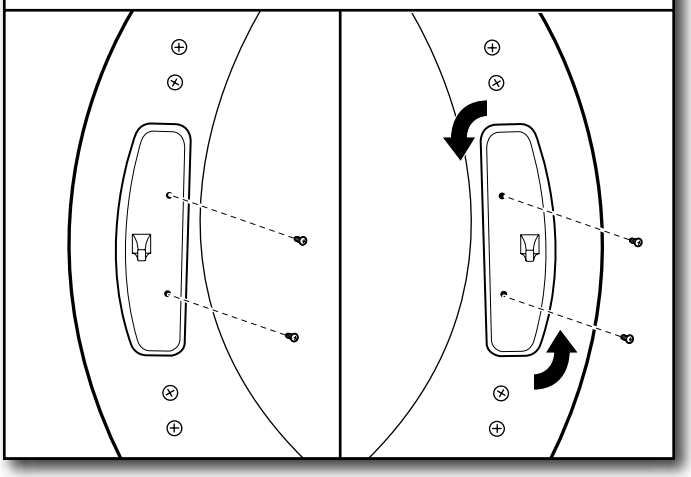

Using a T25® screwdriver, remove the 2 screws securing the door strike to the door frame of the dryer. Rotate the strike 180° and attach to the opposite side of dryer door frame as shown.

3. Remove inner door from outer door

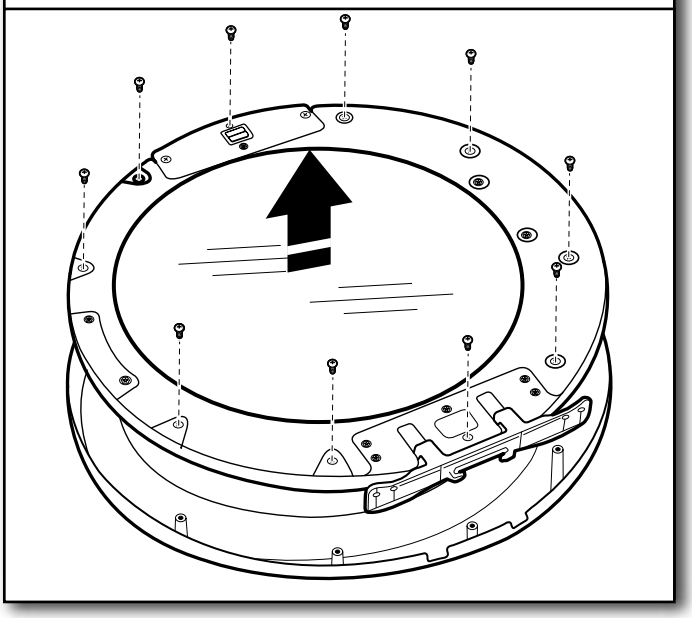

Position the door with the inside of the door facing up. Using a Phillips screwdriver, remove the 10 screws securing the inner door to the outer door. Lift off the inner door and set aside.

4. Remove outer window assembly from trim ring

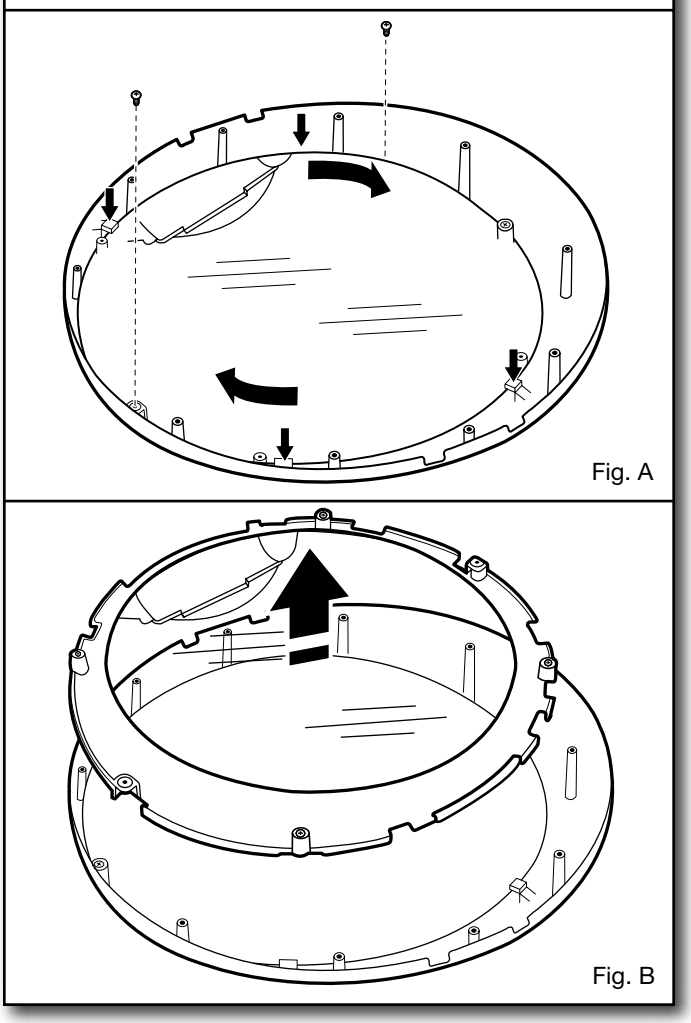

Using a Phillips screwdriver, remove the 2 screws from the outer window retainer and rotate the outer window assembly clockwise until the square notches line up with the 4 tabs on the trim ring indicated with arrows in the figure A above. Then lift out the outer window and retainer up and off the trim ring and set aside (B).

†®TORX and T25 are registered trademarks of Acument Intellectual Properties, LLC.

5. Reverse outer window assembly

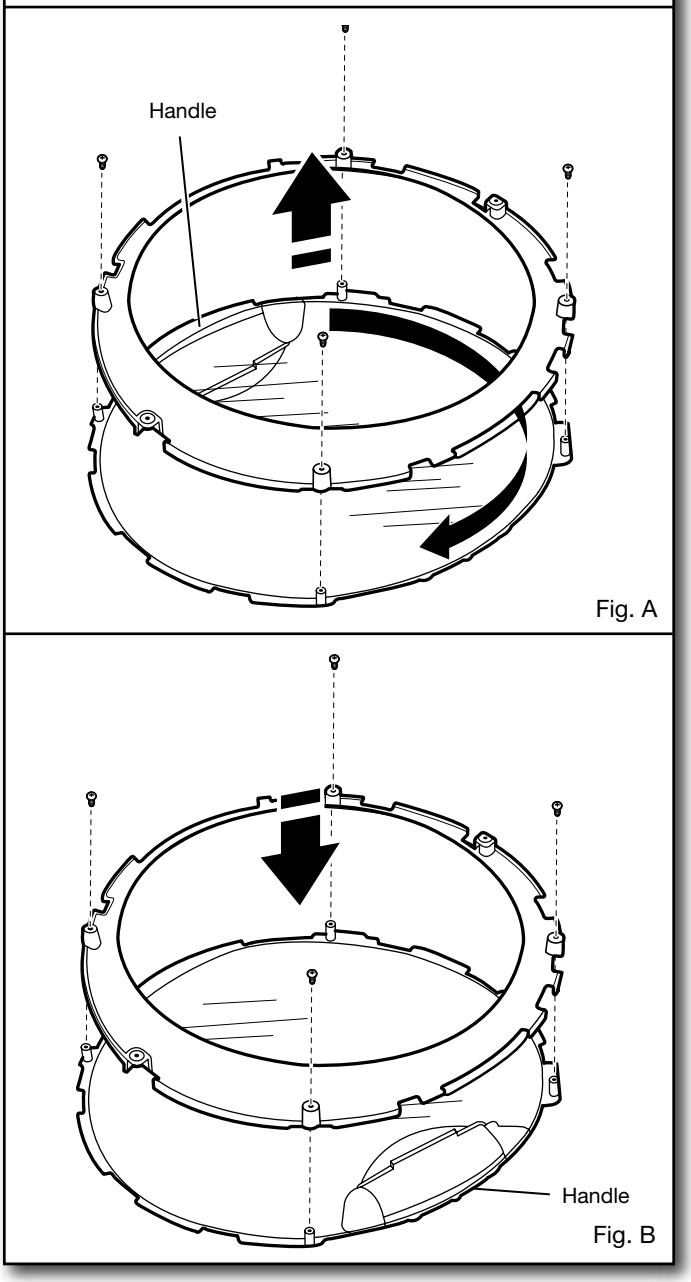

Using a Phillips screwdriver, remove the 4 screws from the outer window retainer and lift off the trim ring off the window (A). Rotate trim ring 180° and secure with the 4 screws removed earlier (B).

6. Rotate and reassemble outer window assembly to trim ring

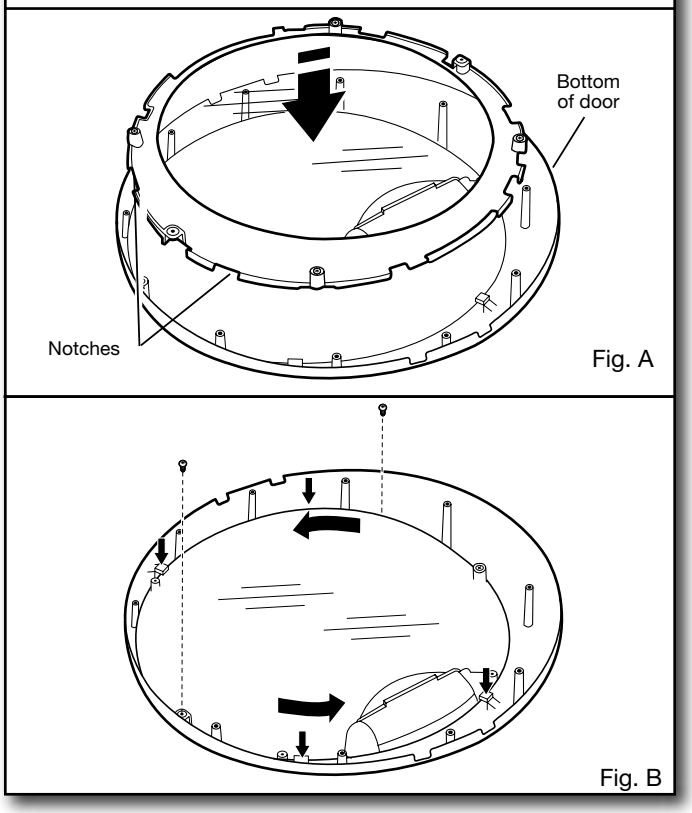

With the edge with 2 notches at the top, align the notches on the outer window assembly with the tabs on the trim ring and lower into place as shown in figure A. Rotate the outer window assembly counterclockwise to lock tabs into place (figure B). Using a Phillips screwdriver, secure with 2 screws removed earlier.

IMPORTANT: Do not overtighten.

7. Remove hinge and latch

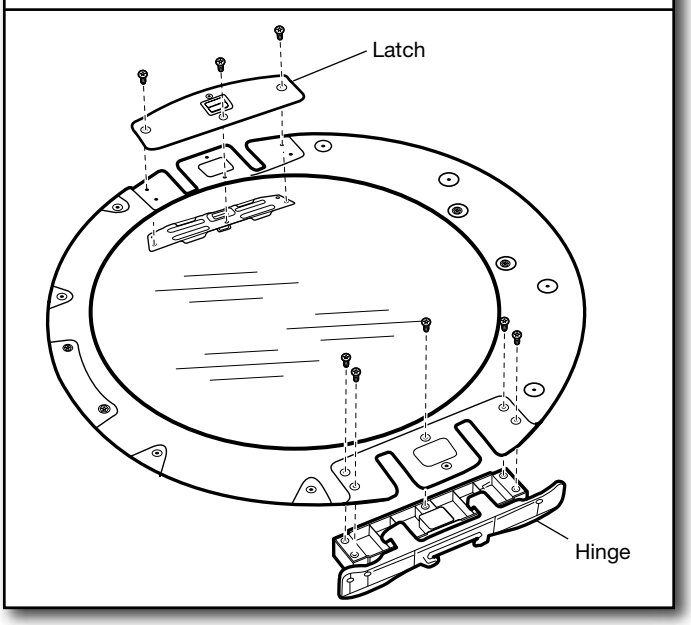

Using a T25® screwdriver, remove the 3 screws securing the latch plate and latch backing plate and the 5 screws holding the hinge assembly in place.

8. Reinstall hinge and latch on opposite sides

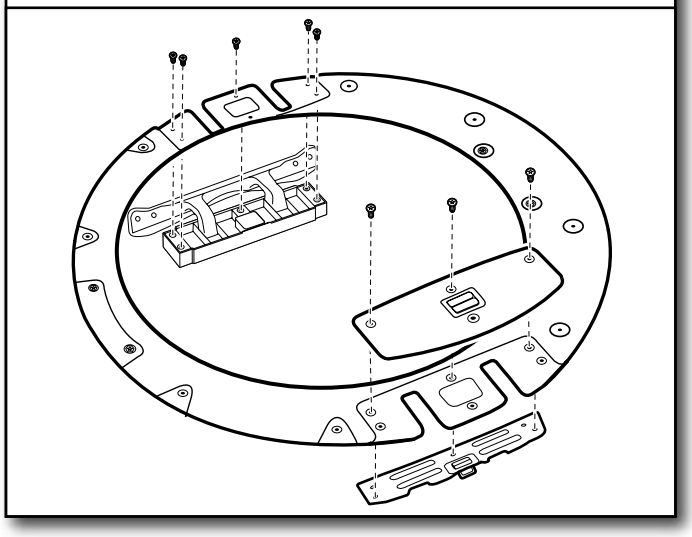

Using a T25® screwdriver, reinstall the latch plate, latch backing plate, and hinge assembly on the opposite sides from which they were removed.

9. Reinstall inner door assembly

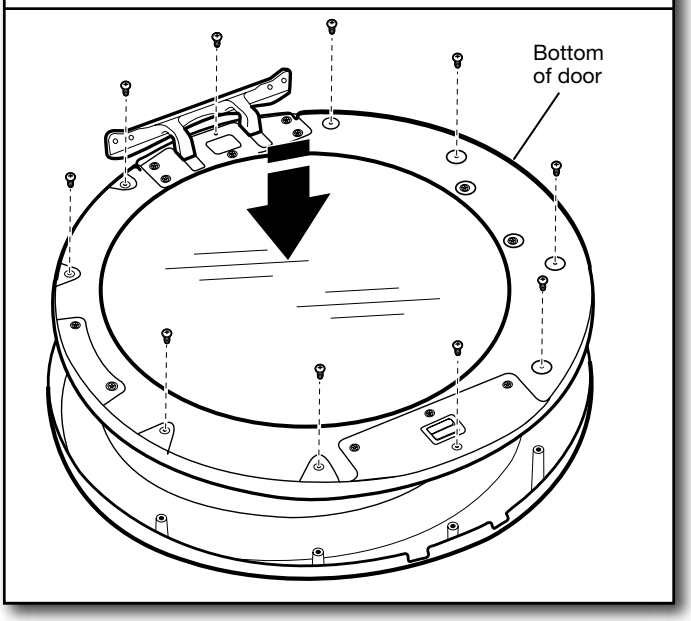

Position the door with the inside of the door facing up. Reinstall the 10 screws securing the inner door to the outer door.

10. Reinstall door on dryer

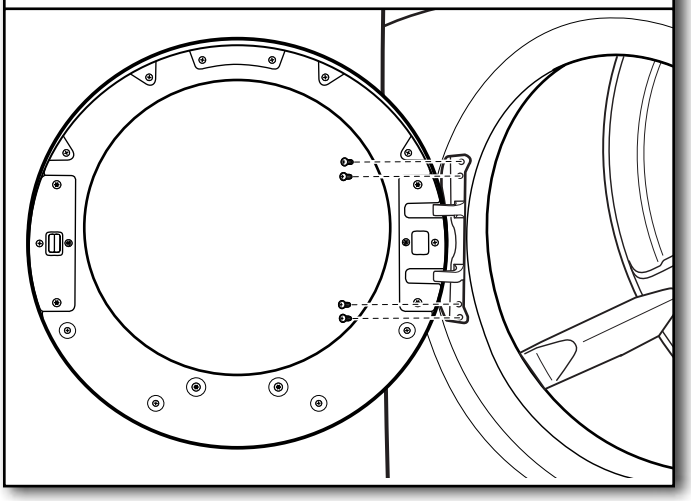

Using a T25® screwdriver, remove the 4 screws on the dryer. Insert the tabs on the hinge into the mounting slot and slide down to engage the top tab. Secure in place with the 4 T25® screws removed earlier.

Reverse door swing round-shaped door with flat glass – double handle

1. Remove door from dryer

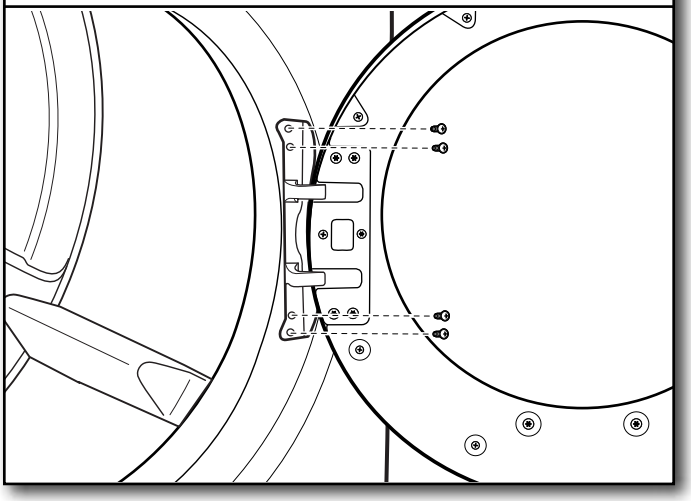

IMPORTANT: If the protective film has not yet been removed from the dryer, peel the film from the dryer door before proceeding.

Using a T25® screwdriver, remove the 4 screws securing the door hinge to the dryer and lift up and out to remove the door. Place the door on a soft towel or other non-scratch surface. Reinstall the 4 screws in the holes.

2. Move the door strike

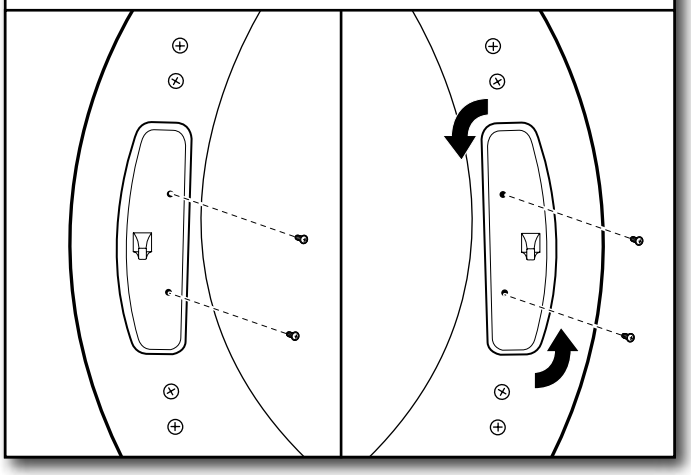

Using a T25® screwdriver, remove the 2 screws securing the door strike to the door frame of the dryer. Rotate the strike 180° and attach to the opposite side of dryer door frame as shown.

3. Remove inner door from outer door

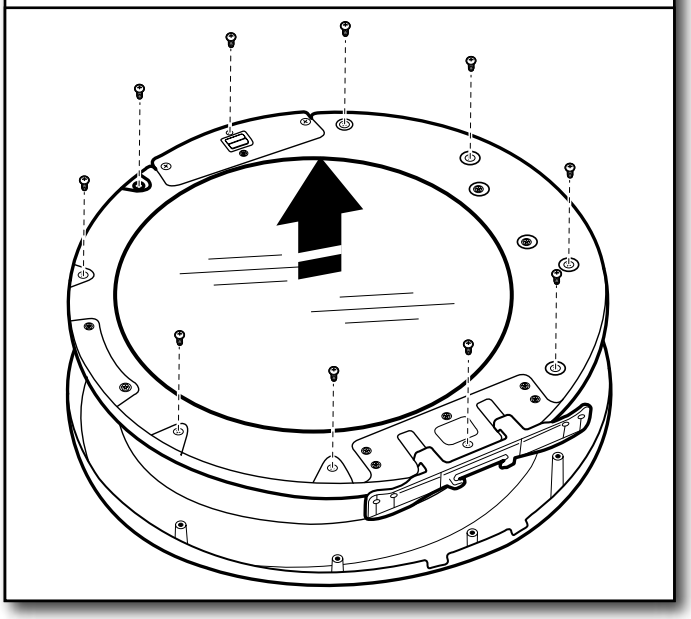

Position the door with the inside of the door facing up. Using a Phillips screwdriver, remove the 10 screws securing the inner door to the outer door. Lift off the inner door and set aside.

4. Remove hinge and latch

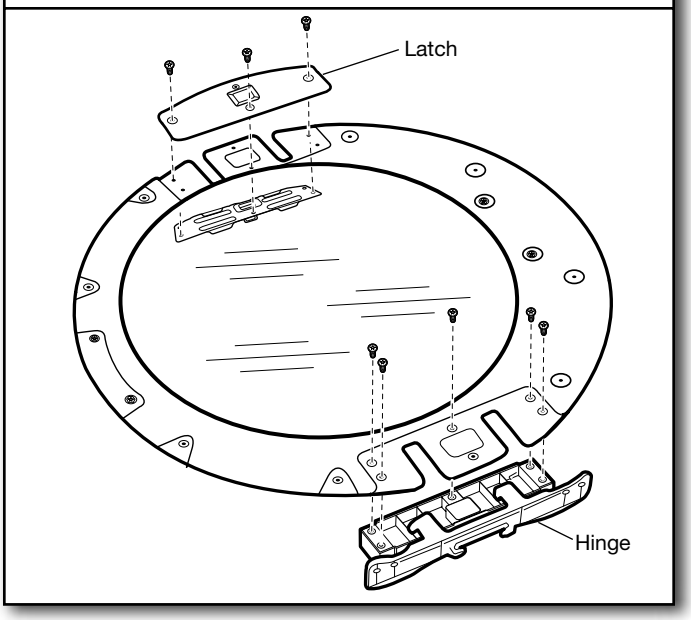

Using a T25® screwdriver, remove the 3 screws securing the latch plate and latch backing plate and the 5 screws holding the hinge assembly in place.

5. Reinstall hinge and latch on opposite sides

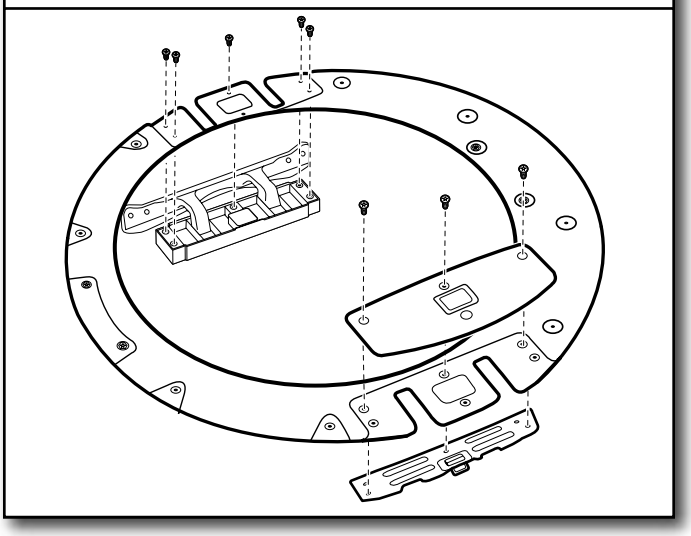

Using a T25® screwdriver, reinstall the latch plate and latch backing plate with the 3 TORX® screws removed earlier and the hinge assembly with the 5 screws on the opposite sides from which they were removed.

6. Reinstall inner door assembly

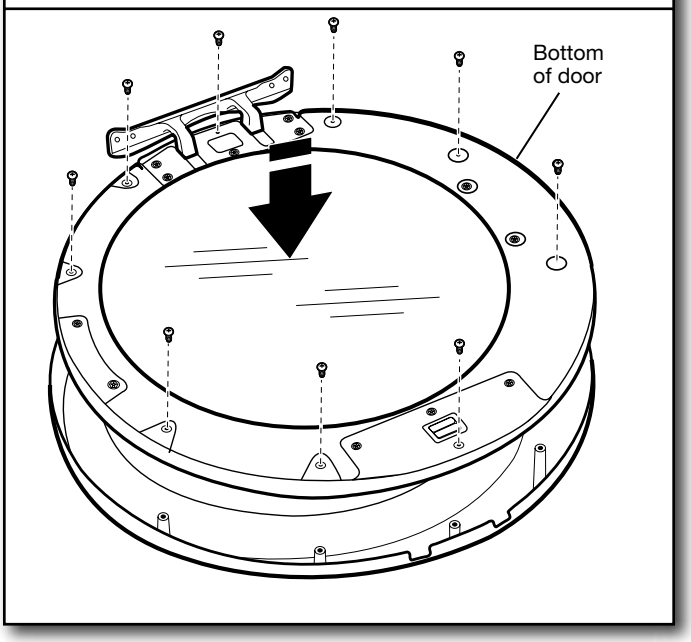

Position the door with the inside of the door facing up. Reinstall the 10 screws securing the inner door to the outer door.

7. Reinstall door on dryer

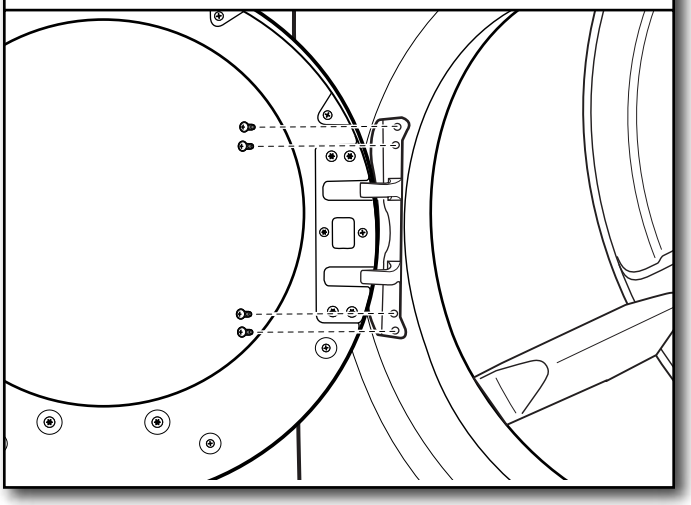

Using a T25® screwdriver, remove the 4 screws on the dryer. Insert the tabs on the hinge into the mounting slot and slide down to engage the top tab. Secure in place with the 4 screws removed earlier.

Reverse door swing round-shaped door with curved glass – double handle

1. Remove door from dryer

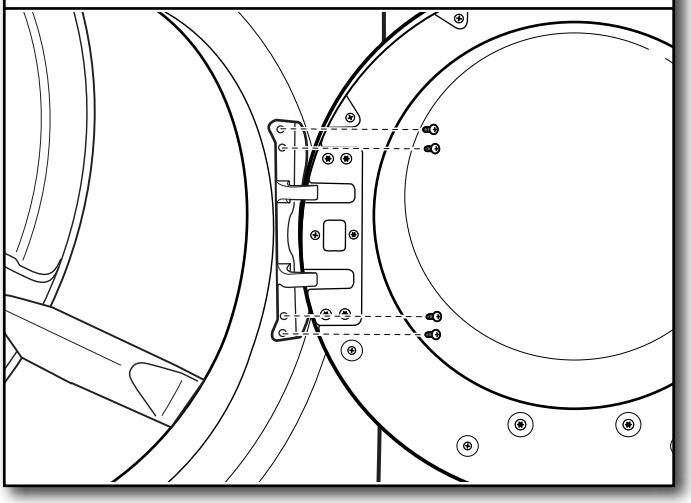

IMPORTANT: If the protective film has not yet been removed from the dryer, peel the film from the dryer door before proceeding.

Using a T25® screwdriver, remove the 4 screws securing the door hinge to the dryer and lift up and out to remove the door. Place the door on a soft towel or other non-scratch surface. Reinstall the 4 screws in the holes.

2. Move the door strike

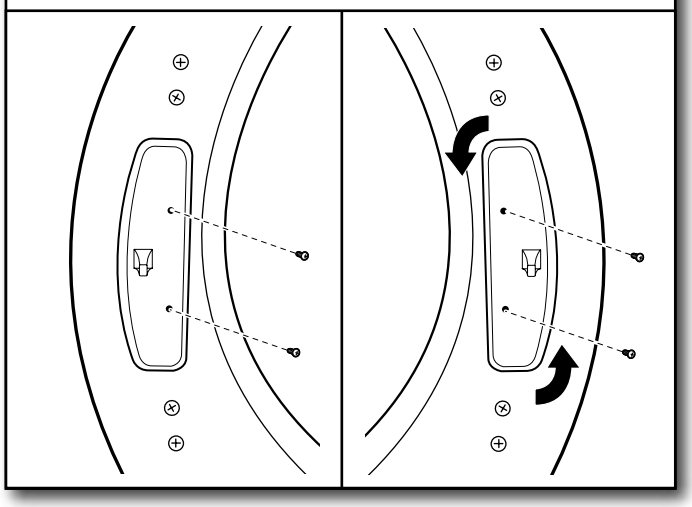

Using a T25® screwdriver, remove the 2 screws securing the door strike to the door frame of the dryer. Rotate the strike 180° and attach to the opposite side of dryer door frame as shown.

3. Remove inner door from outer door

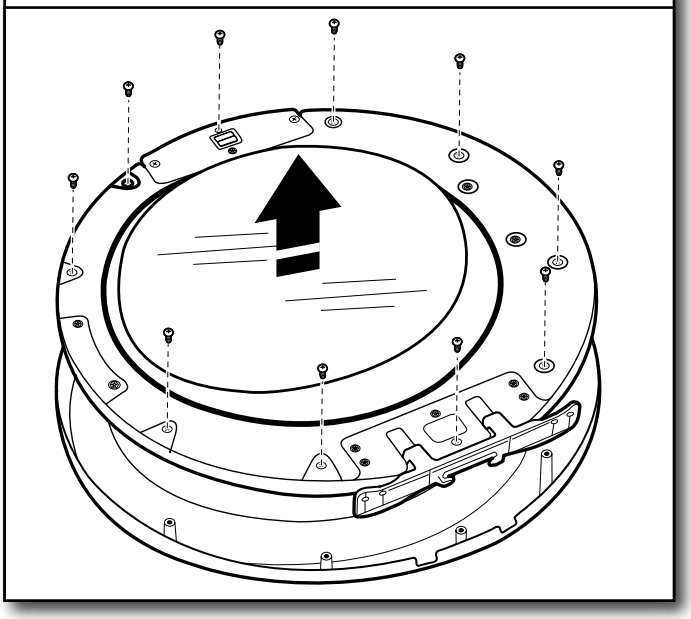

Position the door with the inside of the door facing up. Using a Phillips screwdriver, remove the 10 screws securing the inner door to the outer door. Lift off the inner door and set aside.

4. Remove hinge and latch

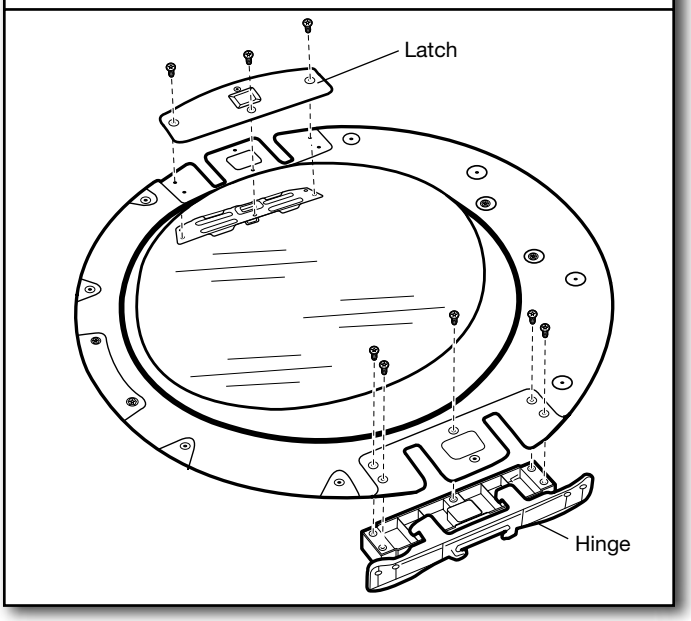

Using a T25® screwdriver, remove the 3 screws securing the latch plate and latch backing plate and the 5 screws holding the hinge assembly in place.

5. Reinstall hinge and latch on opposite sides

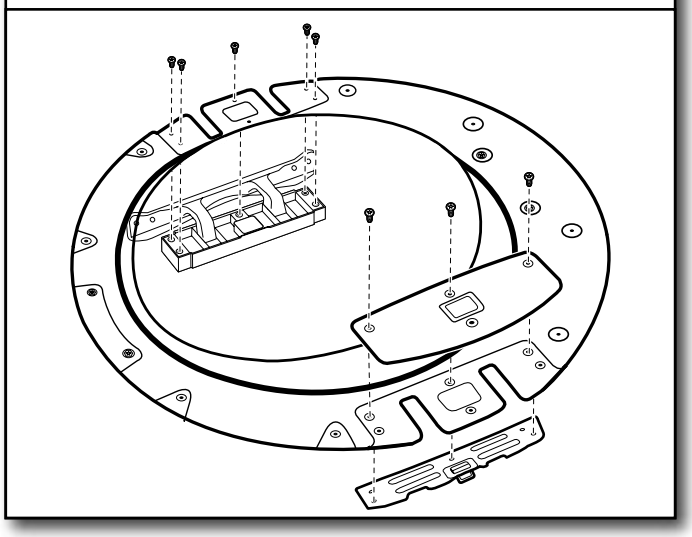

Using a T25® screwdriver, reinstall the latch plate and latch backing plate with the 3 screws removed earlier and the hinge assembly with the 5 screws on the opposite sides from which they were removed.

6. Reinstall inner door assembly

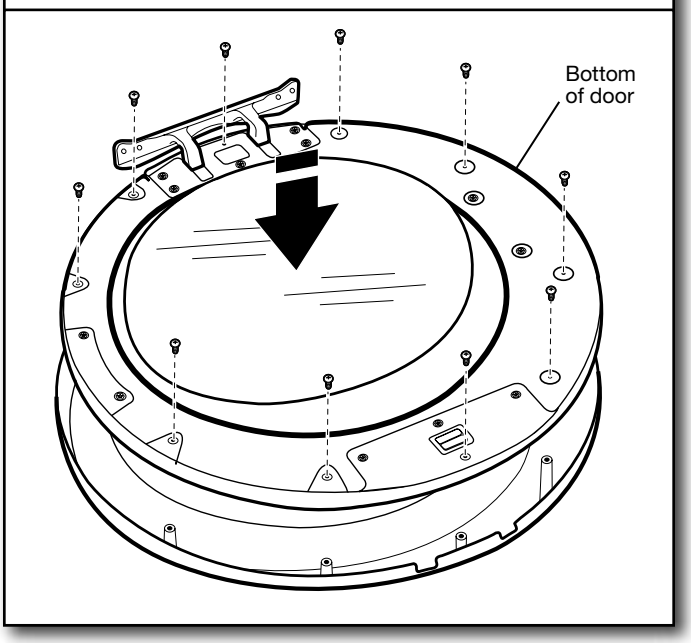

Position the door with the inside of the door facing up. Reinstall the 10 screws securing the inner door to the outer door.

7. Reinstall door on dryer

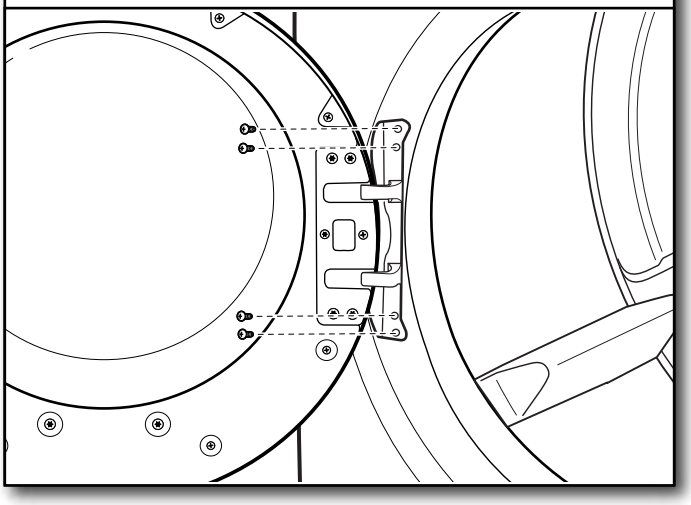

Using a T25® screwdriver, remove the 4 screws on the dryer. Insert the tabs on the hinge into the mounting slot and slide down to engage the top tab. Secure in place with the 4 T25® screws removed earlier.

Reverse door swing square-shaped door

1. Remove door from dryer

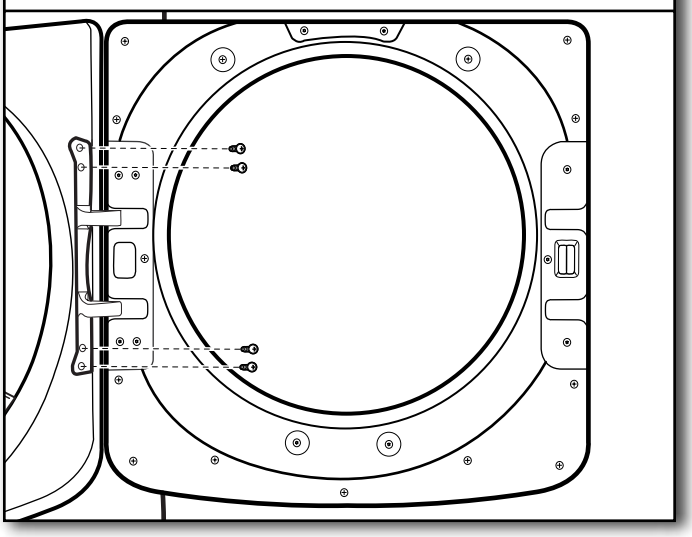

Using a T25® screwdriver, remove the 4 screws securing the door hinge to the dryer and lift up and out to remove the door. Place the door on a soft towel or other non-scratch surface. Retain or set aside the 4 screws.

2. Move the door strike

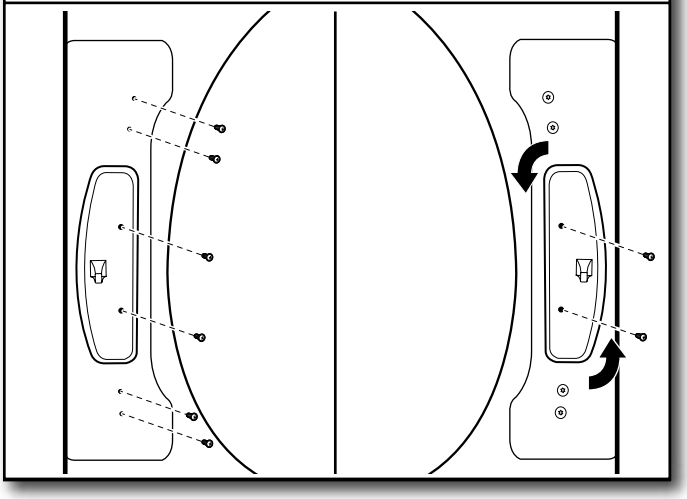

Using a T25® screwdriver, remove the 2 screws securing the door strike to the door frame of the dryer. Remove the 4 screws above and below the door strike and set aside for later use. Rotate the strike 180° and attach to the opposite side of dryer door frame as shown.

3. Remove inner door from outer door

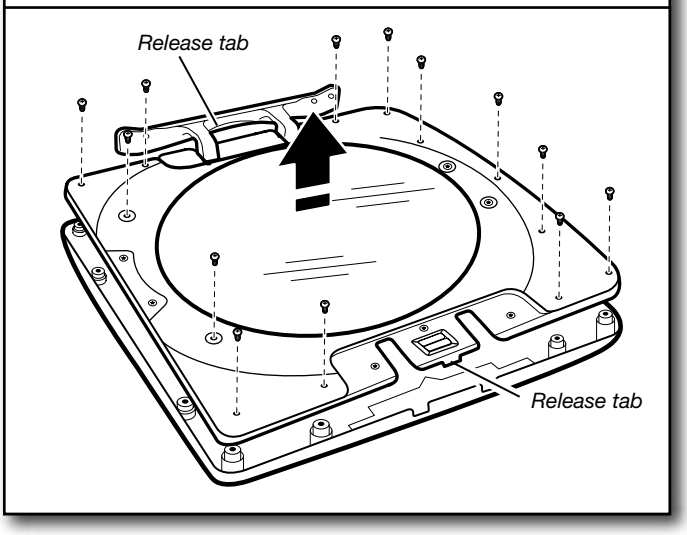

Position the door with the inside of the door facing up. Using a Phillips screwdriver, remove the 13 screws securing the inner door to the outer door. Lift off the inner door and set aside.

NOTE: There is a small release tab on each side of the door. If the inner and outer door do not separate easily, slide a credit card, putty knife, or similar flat object between the inner and outer doors at the locations shown to release the tab.

4. Remove hinge and latch from inner door

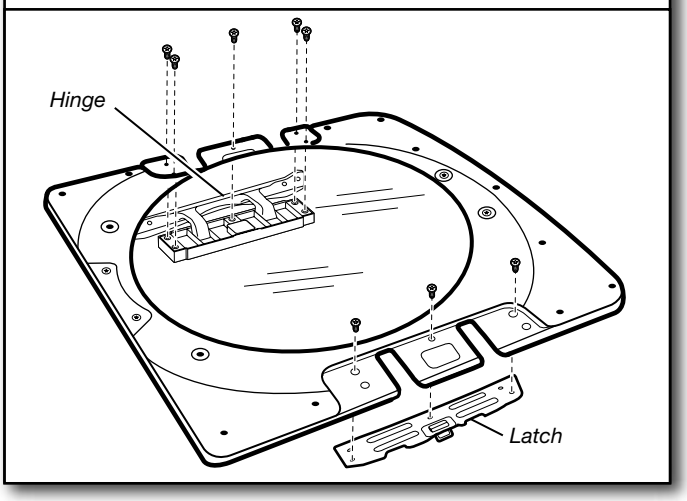

Using a T25® screwdriver, remove the 3 screws securing the latch plate and the 5 screws holding the hinge assembly in place.

5. Reinstall hinge and latch on opposite sides

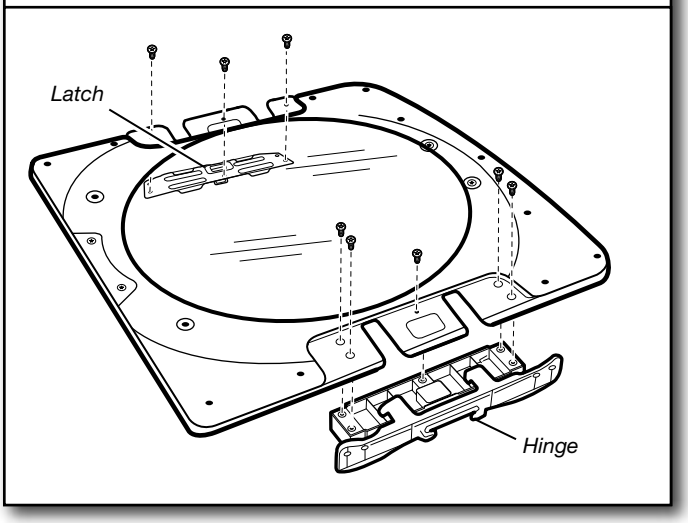

Using a T25® screwdriver, reinstall the latch plate and hinge assembly on the opposite sides from which they were removed.

6. Reattach inner door to outer door

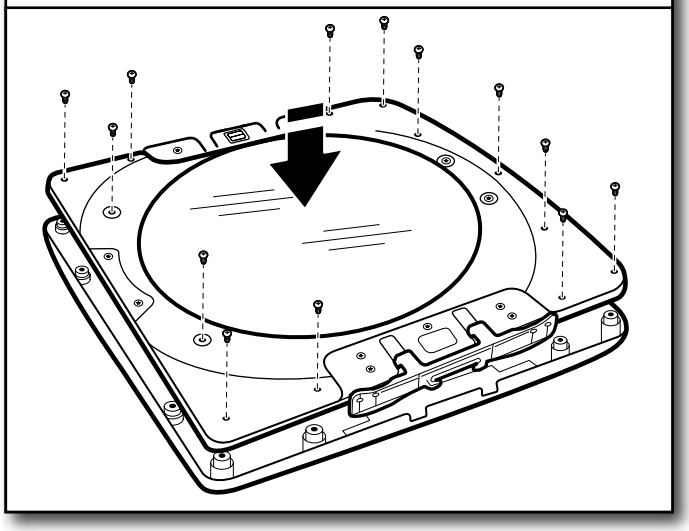

Position the inner door on the outer door assembly. Using a Phillips screwdriver, secure with the 13 screws removed earlier.

7. Reattach door to dryer

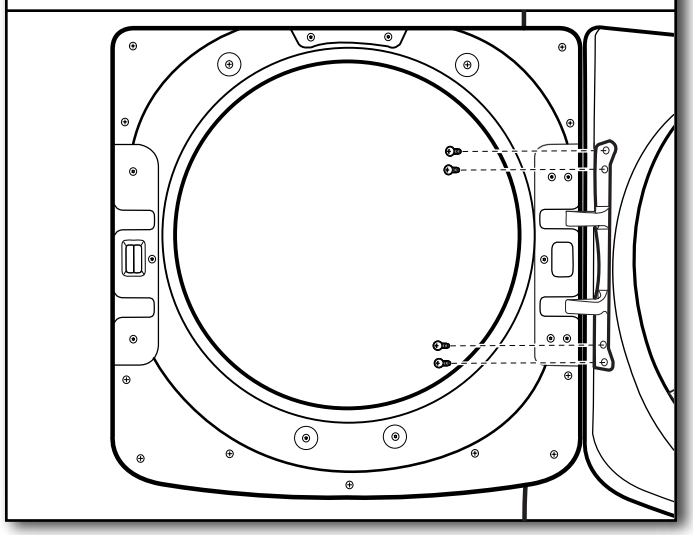

Using a T25® screwdriver, reinstall the 4 screws securing the door hinge to the dryer.

©2016. All rights reserved.
Used under license in Canada.